KARIBAN

REFERENCE : K011 **NAME :** ORLANDO

SIZES : U

COMPOSITION :
Main fabric : Brushed cotton twill 260 74x44 100%cotton

WEIGHT :
Main fabric : 260 gsm

FABRIC CONSTRUCTION AND FINISHING :
74x44

DESCRIPTION	
Français :	Casquette 6 panneaux
English :	6 panel cap
Nederlands :	Herenpet met 6 segmenten
Deutsch :	Herren kappe 6-teilig
Español :	Gorra para hombre 6 paneles
Italiano :	Cappellino uomo 6 pannelli
Português :	Boné

deetex.de

MEASUREMENT							
Description	**U**						
H10 Tour de tête / Head measurement	**58**						

PACKING	
Box	100 pcs / box U => L:51cm W:45cm H:36cm GW:9.50kg NW:7.50kg

CARE LABEL

KARIBAN

REFERENCE : K011

NAME : ORLANDO

SIZES : U

COMPOSITION :
Main fabric : Brushed cotton twill 260 100%cotton

WEIGHT :
Main fabric : 260 gsm

FABRIC CONSTRUCTION AND FINISHING :
74x44

COLORS	PANTONE SERIGRAPHIE
Navy / White	539C / White
Forest green / Beige	567C / 7534C
Sky blue / White	277C / White
Royal blue / White	294C / 7534C
White / Navy	White / 539C
Red / White	186C / White
Beige / White	7503C / White
Burgundy / White	229C / White
Green olive / Beige	448C / 7534C
Black / White	Black / White
Orange / Navy	1505C / 539C
Slate grey / Light grey	425C / 429C
Dark grey / Black	432C / Black
White / Red	White / 186C
Chocolate / Beige	4975C / 7534C
Kelly green / Black	347C / Black
Yellow / Slate grey	12C / 425C
Black / Red	Black / 186C
Khaki / Black	448C / Black
Navy / Pink	539C / 210C
Black / Yellow	Black / 12C
Black / Orange	Black / 1505C
Black / Lime	Black / 374C
Slate grey / Red	425C / 186C
Dark grey / Orange	432C / 1505C
Navy / Yellow	539C / 12C
Navy / Sky blue	539C / 277C
Black / Royal blue	Black / 294C
Red / Black	186C / Black
Red / Yellow	186C / 12C
Navy / Navy	539C / 539C
Black / Black	Black / Black
White / White	White / White
Royal blue / White / Red	294C / White / 186C
Black / Yellow / Red	Black / 12C / 186C
Red / White / Green	186C / White / 356C

deetexie

KARIBAN

REFERENCE : K013

NAME : BAHIA

SIZES : U

COMPOSITION :
Main fabric : Cotton twill 180 108x58 / 21sx21s 100%cotton

WEIGHT :
Main fabric : 180 gsm

FABRIC CONSTRUCTION AND FINISHING :
108x58 / 21sx21s

COLORS	PANTONE SERIGRAPHIE
Navy	539C
Red	186C
White	White
Orange	1505C
Forest green	567C
Black	Black
Royal blue	294C
Yellow	12C
Wine	229C
Sky blue	277C
Kelly green	3288C
Light grey	401C
Lime	381U

DESCRIPTION

Français :	Casquette 7 panneaux
English :	7 panel cap
Nederlands :	Pet met 7 segmenten
Deutsch :	Kappe 7-teilig
Español :	Gorra 7 paneles
Italiano :	Cappellino 7 pannelli
Português :	Boné

deetex.de

MEASUREMENT

Description	U						
H10 Tour de tête / Head measurement	58						

PACKING

Box	100 pcs / box U => L:40cm W:40cm H:30cm GW:9.00kg NW:7.00kg

CARE LABEL

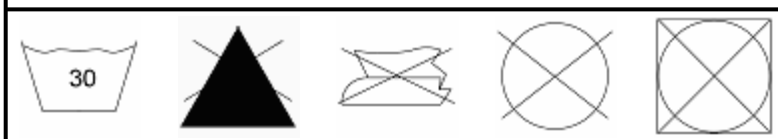

KARIBAN

REFERENCE : K023

NAME : BOB VOYAGER

SIZES : U

COMPOSITION :
Main fabric : Cotton twill 290 Washed 100%cotton

COLORS	PANTONE SERIGRAPHIE
Navy	296C
Khaki	462C
Beige	7535C

WEIGHT :
Main fabric : 290 gsm

FABRIC CONSTRUCTION AND FINISHING :
108x58 Washed

DESCRIPTION	
Français :	Bob
English :	Bob
Nederlands :	Bob
Deutsch :	Bob
Español :	Bob
Italiano :	Bob
Português :	Panamá

deetex.de

MEASUREMENT							
Description	**U**						
H10 Tour de tête / Head measurement	**59**						

PACKING	
Box	100 pcs / box U => L:40cm W:40cm H:30cm GW:9.00kg NW:7.00kg

CARE LABEL

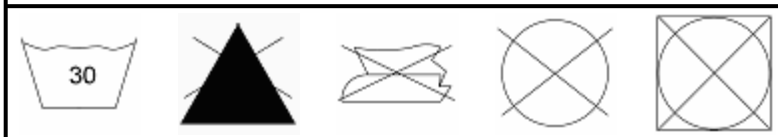

KARIBAN

REFERENCE : K024

NAME : BOB BONNY

SIZES : U

COMPOSITION :

Main fabric : Cotton twill 260 100%cotton
Main fabric : Cotton twill 280 For denim fabric only 100%cotton

WEIGHT :

Main fabric : 260 gsm
Main fabric : 280 gsm

FABRIC CONSTRUCTION AND FINISHING :

108x56 & 10 oz (for denim) Washed

COLORS	PANTONE SERIGRAPHIE
Beige	7501C
Orange	1575C
Black	Black
Khaki	462C
Sky blue	650C
Denim	Jean
Lilas	2635C

DESCRIPTION

Français :	Bob
English :	Bob
Nederlands :	Bob
Deutsch :	Bob
Español :	Bob
Italiano :	Bob
Português :	Bob

MEASUREMENT

Description	U						
H10 Tour de tête / Head measurement	57						

PACKING

Box	100 pcs / box U => L:56cm W:37cm H:29cm GW:10.60kg NW:8.40kg

CARE LABEL

fleetex.de

KARIBAN

REFERENCE : K031

NAME : HAT

SIZES : U

COMPOSITION :
Main fabric : Acrylic knit 280 100%acrylic

WEIGHT :
Main fabric : 280 gsm

COLORS	PANTONE SERIGRAPHIE
Navy	296C
Red	186C
Green olive	Black 2C
Forest green	560C
Black	Black
Chocolate	Black 4C
Grey	7546C
Royal blue	286C

DESCRIPTION

Français :	Bonnet
English :	Knitted hat
Nederlands :	Muts
Deutsch :	Mutze
Español :	Gorro
Italiano :	Cappello in maglia
Português :	Gorro

MEASUREMENT

Description	U						

PACKING

Box	100 pcs / box U => L:40cm W:29cm H:48cm GW:6.50kg NW:5.50kg

CARE LABEL

KARIBAN

REFERENCE : K034

NAME : FIRST

SIZES : U

COMPOSITION :
Main fabric : Cotton twill 155 108x58 / 24sx24s 100%cotton

WEIGHT :
Main fabric : 155 gsm

FABRIC CONSTRUCTION AND FINISHING :
108x58 / 24sx24s

COLORS	PANTONE SERIGRAPHIE
Navy	539C
Red	186C
White	White
Orange	1505C
Forest green	567C
Black	Black
Royal blue	294C
Yellow	12C

DESCRIPTION

Français :	Casquette 5 panneaux
English :	5 panel cap
Nederlands :	Pet met 5 segmenten
Deutsch :	Kappe 5-teilig
Español :	Gorra 5 paneles
Italiano :	Cappellino 5 pannelli
Português :	Boné 5 painéis

deetex.de

MEASUREMENT

Description	U						
H10 Tour de tête / Head measurement	58						

PACKING

Box	100 pcs / box U => L:39cm W:44cm H:32cm GW:7.00kg NW:5.00kg

CARE LABEL

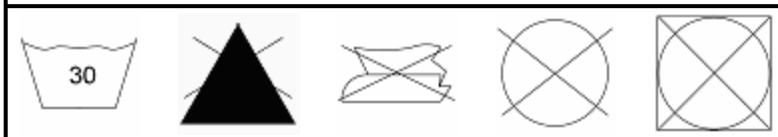

KARIBAN

REFERENCE : K036

NAME : TOP

SIZES : U

COMPOSITION :
Main fabric : Cotton twill 180 108x58 / 21sx21s 100%cotton

WEIGHT :
Main fabric : 180 gsm

FABRIC CONSTRUCTION AND FINISHING :
108x58 / 21sx21s

COLORS	PANTONE SERIGRAPHIE
White / Navy	White / 539C
Navy / White	539C / White
Forest green / Natural	560C / Warm gray 1C
Black / Grey	Black / 422C
Red / Grey	186C / 422C
Beige / White	7527C / White
Dark grey / Black	432C / Black
Orange / White	151C / White
Sky blue / White	658C / White
Pink / White	706C / White

DESCRIPTION

Français :	Casquette 6 panneaux
English :	6 panel cap
Nederlands :	Pet met 6 segmenten
Deutsch :	Kappe 6-teilig
Español :	Gorra 6 paneles
Italiano :	Cappellino 6 pannelli
Português :	Boné de 6 painéis

deetex.de

MEASUREMENT

Description	U						
H10 Tour de tête / Head measurement	58						

PACKING

Box	100 pcs / box U => L:45cm W:45cm H:35cm GW:8.20kg NW:5.50kg

CARE LABEL

KARIBAN

REFERENCE : K041

NAME : FIRST KIDS

SIZES : U

COMPOSITION :
Main fabric : Cotton twill 155 108x58 / 24sx24s 100%cotton

COLORS	PANTONE SERIGRAPHIE
Navy	539C
Red	186C
White	White

WEIGHT :
Main fabric : 155 gsm

FABRIC CONSTRUCTION AND FINISHING :
108x58 / 24s x 24s

DESCRIPTION	
Français :	Casquette enfant 5 panneaux
English :	5 panel children cap
Nederlands :	Kinderpet met 5 segmenten
Deutsch :	Kinder kappe 5-teilig
Español :	Gorra para niños 5 paneles
Italiano :	Cappellino bambino 5 pannelli
Português :	Bone First de criança

deetex.de

MEASUREMENT							
Description	**U**						
H10 Tour de tête / Head measurement	**54**						

PACKING	
Box	100 pcs / box U => L:40cm W:40cm H:30cm GW:6.50kg NW:4.80kg

CARE LABEL

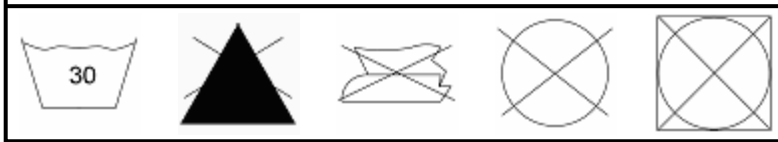

KARIBAN

REFERENCE : K042

NAME : ORLANDO KIDS

SIZES : U

COMPOSITION :
Main fabric : Brushed cotton twill 260 74x44 100%cotton

COLORS	PANTONE SERIGRAPHIE
Red / White	186C / White
Navy / White	539C / White
Royal blue / White	294C / White
Beige / White	7503C / White
Black / White	Black / White
Pink / White	217C / White

WEIGHT :
Main fabric : 260 gsm

FABRIC CONSTRUCTION AND FINISHING :
74x44

DESCRIPTION	
Français :	Casquette enfant 6 panneaux
English :	Children cap 6 panel
Nederlands :	Kinderpet met 6 segmenten
Deutsch :	Kappe 6-teilig
Español :	Gorra para niños 6 paneles
Italiano :	Cappellino bambino 6 pannelli
Português :	Bone Orlando de criança

deetex.de

MEASUREMENT							
Description	**U**						
H10 Tour de tête / Head measurement	**54**						

PACKING	
Box	100 pcs / box U => L:51cm W:45cm H:36cm GW:9.50kg NW:7.50kg

CARE LABEL

KARIBAN

REFERENCE : K043

NAME : ORLANDO WOMAN

SIZES : U

COMPOSITION :
Main fabric : Brushed cotton twill 260 74x44 100%cotton

WEIGHT :
Main fabric : 260 gsm

FABRIC CONSTRUCTION AND FINISHING :
74x44

COLORS	PANTONE SERIGRAPHIE
Khaki / Orange	448C / 1505C
Pink / White	217C / White
Yellow / White	12C / White
White / Sky blue	White / 277C
Navy / White	539C / White
Red / White	186C / White
Black / White	Black / White
Beige / White	7503C / White

DESCRIPTION

Français :	Casquette femme 6 panneaux
English :	6 panel ladies cap
Nederlands :	Damespet met 6 segmenten
Deutsch :	Damen kappe 6-teilig
Español :	Gorra para mujer 6 paneles
Italiano :	Cappellino donna 6 pannelli
Português :	Boné de senhora 6 painéis

deetex.de

MEASUREMENT							
Description	**U**						
H10 Tour de tête / Head measurement	**56**						

PACKING	
Box	100 pcs / box U => L:51cm W:45cm H:36cm GW:9.50kg NW:7.50kg

CARE LABEL

KARIBAN

REFERENCE : K044

NAME : CAP BANDANA

SIZES : U

COMPOSITION :
Main fabric : Brushed cotton twill 180 100%cotton

COLORS	PANTONE SERIGRAPHIE
Red	186C
White	White
Black	Black
Khaki	448C
Sand	7534C

WEIGHT :
Main fabric : 180 gsm

FABRIC CONSTRUCTION AND FINISHING :
108X58 / 21sx21s

DESCRIPTION

Français :	Bandana mixte
English :	Bandana
Nederlands :	Bandana unisex
Deutsch :	Bandana Unisex
Español :	Bandana mixta
Italiano :	Bandana mista
Português :	Lenço bandana unisexo

deetex.de

MEASUREMENT

Description	U						
H10 Tour de tête / Head measurement	58						

PACKING

Box	100 pcs / box U => L:46cm W:29cm H:16cm GW:4.20kg NW:3.00kg

CARE LABEL

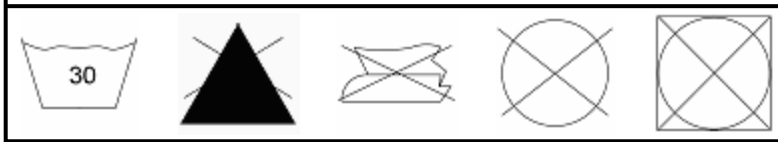

KARIBAN

REFERENCE : K045

NAME : RACING

SIZES : U

COMPOSITION :

Main fabric : Brushed cotton twill 260 74x44 100%cotton
Main fabric : Brushed cotton twill 260 For contrasted part 74x44 100%cotton

WEIGHT :

Main fabric : 260 gsm
Main fabric : 260 gsm

FABRIC CONSTRUCTION AND FINISHING :

74x44

COLORS	PANTONE SERIGRAPHIE
Red / Black	186C / Black
Navy / Red	539C / 186C
Black / Yellow	Black / 12C
Kelly green / Yellow	347C / 12C
Ice blue / Denim	277C / 534C
Navy / White	539C / White
Forest green / White	567C / White
Royal blue / White	294C / White
Orange / White	1505C / White
Black / White	Black / White
Royal blue / Yellow	294C / 12C
Red / White	186C / White
Black / Orange	Black / 1505C
Pink / White	217C / White
Yellow / Red	12C / 186C
White / Sky blue	White / 277C
Dark grey / Black	432C / Black
Chocolate / Black	4975C / Black

DESCRIPTION

Français :	Casquette
English :	Cap
Nederlands :	Herenpet
Deutsch :	Herren kappe
Español :	Gorra para hombre
Italiano :	Cappellino uomo
Português :	Boné de 6 painéis

MEASUREMENT

Description	U						
H10 Tour de tête / Head measurement	58						

PACKING

Box	100 pcs / box U => L:51cm W:40cm H:36cm GW:10.70kg NW:8.00kg

CARE LABEL

deetex.de

KARIBAN

REFERENCE : K047

NAME : BAROUDEUR

SIZES : U

COLORS	PANTONE SERIGRAPHIE
Beige	7535C

COMPOSITION :
Main fabric : Brushed cotton twill 350 100%cotton

WEIGHT :
Main fabric : 350 gsm

FABRIC CONSTRUCTION AND FINISHING :
7X7

DESCRIPTION	
Français :	Baroudeur
English :	Baroudeur
Nederlands :	Bob baroudeur
Deutsch :	Hut
Español :	Sombrero
Italiano :	Bob
Português :	Panamá Barouder

deetex.de

MEASUREMENT							
Description	**U**						
H10 Tour de tête / Head measurement	**60**						

PACKING	
Box	100 pcs / box U => L:64cm W:45cm H:34cm GW:10.50kg NW:8.30kg

CARE LABEL

KARIBAN

REFERENCE : K050

NAME : CUBA

SIZES : U

COMPOSITION :
Main fabric : Cotton twill 280 Washed 100%cotton

COLORS	PANTONE SERIGRAPHIE
Beige	7530C
Black	Black
Khaki	416C

WEIGHT :
Main fabric : 280 gsm

FABRIC CONSTRUCTION AND FINISHING :
Washed

DESCRIPTION	
Français :	Casquette 3 panneaux
English :	3 panel cap
Nederlands :	Pet in 3 segmenten
Deutsch :	3-teilige kappe
Español :	Gorra 3 paneles
Italiano :	Cappellino 3 panneli
Português :	Boina de 3 painéis

deetex.de

MEASUREMENT							
Description	**U**						
H10 Tour de tête / Head measurement	**60**						

PACKING	
Box	100 pcs / box U => L:44cm W:45cm H:33cm GW:9.10kg NW:7.00kg

CARE LABEL

KARIBAN SARL au capital de 100 000 € 13 Avenue du Girou ZAC Eurocentre 31620 Villeneuve Les Bouloc Tél : 00 33 (0)5 61 00 62 00 Fax: 00 33 (0)5 53 84 68 43

KARIBAN

REFERENCE : K051

NAME : ACTION II

SIZES : U

COMPOSITION :
Main fabric : Brushed cotton twill 180 100%cotton

COLORS	PANTONE SERIGRAPHIE
Navy	296C
Red	200C
Beige	7530C
White	White
Forest green	557C
Black	Black
Slate grey	Cool gray 9C

WEIGHT :
Main fabric : 180 gsm

FABRIC CONSTRUCTION AND FINISHING :
108x58

DESCRIPTION

Français :	Casquette 5 panneaux
English :	5 panel cap
Nederlands :	Pet met 5 segmenten
Deutsch :	Teilige kappe
Español :	Gorra 5 paneles
Italiano :	Cappellino 5 pannelli
Português :	Boné de 5 painéis

deetex.de

MEASUREMENT

Description	U						
H10 Tour de tête / Head measurement	58						

PACKING

Box	100 pcs / box U => L:45cm W:45cm H:35cm GW:8.80kg NW:6.50kg

CARE LABEL

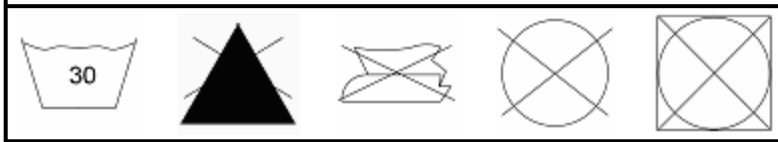

KARIBAN

REFERENCE : K052

NAME : BORNEO

SIZES : U

COMPOSITION :
Main fabric : Cotton twill 155 100%cotton

COLORS	PANTONE SERIGRAPHIE
Red / White	200C / White
Royal blue / White	287C / White
Navy / White	296C / White
Black / White	Black / White

WEIGHT :
Main fabric : 155 gsm

FABRIC CONSTRUCTION AND FINISHING :
108x58

DESCRIPTION	
Français :	Casquette 5 panneaux
English :	5 panel cap
Nederlands :	Pet met 5 segmenten
Deutsch :	Kappe 5-teilig
Español :	Gorra 5 paneles
Italiano :	Cappellino 5 pannelli
Português :	Boné bicolor de 5 painéis

deetex.de

MEASUREMENT							
Description	**U**						
H10 Tour de tête / Head measurement	**58**						

PACKING	
Box	100 pcs / box U => L:40cm W:40cm H:30cm GW:8.00kg NW:6.00kg

CARE LABEL

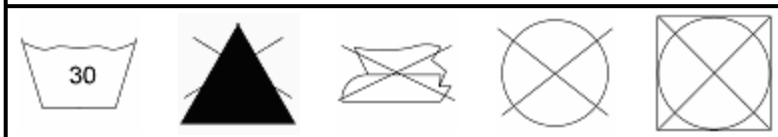

KARIBAN

REFERENCE : K057

NAME : VISOR

SIZES : U

COMPOSITION :
Main fabric : Cotton twill 175 100%cotton

COLORS	PANTONE SERIGRAPHIE
Navy	2767C
White	White

WEIGHT :
Main fabric : 175 gsm

DESCRIPTION	
Français :	Visière
English :	Sports sun visor
Nederlands :	Zonneklep
Deutsch :	Sonnenschild
Español :	Visera
Italiano :	Visiera
Português :	Pala

MEASUREMENT							
Description	**U**						
H10 Tour de tête / Head measurement	**55**						

PACKING	
Box	100 pcs / box U => L:54cm W:49cm H:28cm GW:8.30kg NW:6.00kg

CARE LABEL

deetex.de

KARIBAN

REFERENCE : K060

NAME : HAVANA

SIZES : U

COMPOSITION :
Main fabric : Canvas 250 72x40 100%cotton

COLORS	PANTONE SERIGRAPHIE
Chocolate	Black 4C
Corde	7529C
Black	Black
Jungle	5605C

WEIGHT :
Main fabric : 250 gsm

FABRIC CONSTRUCTION AND FINISHING :
72x40

DESCRIPTION	
Français :	Casquette
English :	Army style cap
Nederlands :	Pet
Deutsch :	Kappe
Español :	Gorra
Italiano :	Cappellino
Português :	Boné

deetex.de

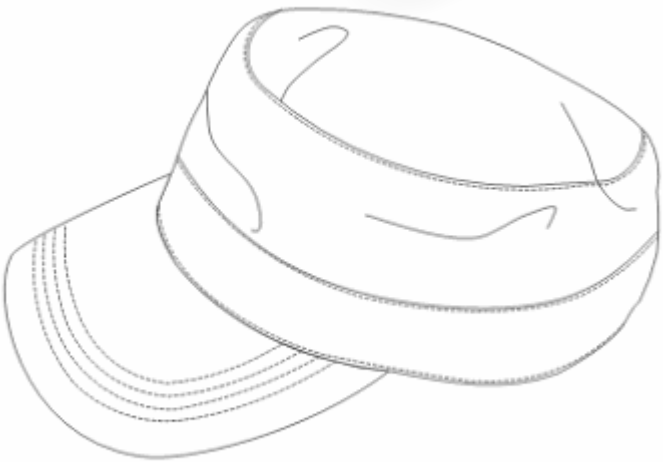

MEASUREMENT							
Description	**U**						
H10 Tour de tête / Head measurement	**59**						

PACKING	
Box	100 pcs / box U => L:52cm W:45cm H:32cm GW:7.50kg NW:5.50kg

CARE LABEL

KARIBAN

REFERENCE : K062

NAME : DROP

SIZES : U

COMPOSITION :

Main fabric : Brushed cotton twill 260 100%cotton

COLORS	PANTONE SERIGRAPHIE
Black	Black
White	White
Navy	539C
Red	186C
Beige	7503C

WEIGHT :

Main fabric : 260 gsm

FABRIC CONSTRUCTION AND FINISHING :

Brushed cotton

DESCRIPTION

Français :	Casquette
English :	Cap
Nederlands :	Pet
Deutsch :	Kappe
Español :	Gora
Italiano :	Cappellino
Português :	Boné de 7 painéis

deetex.de

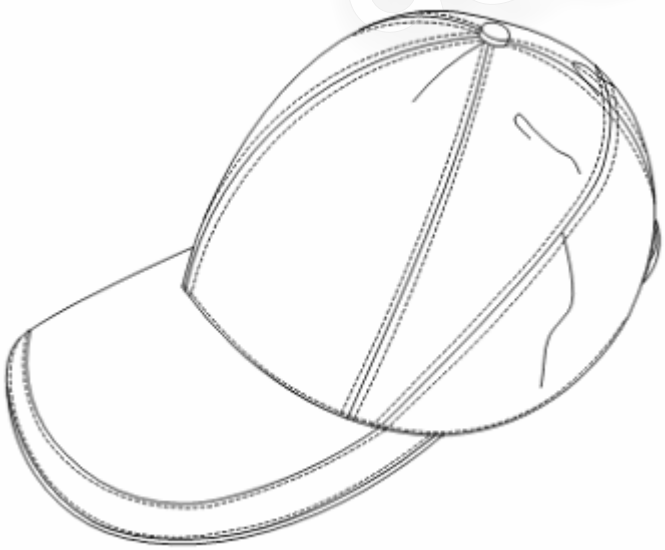

MEASUREMENT

Description	U						
H10 Tour de tête / Head measurement	58						

PACKING

Box	100 pcs / box U => L:51cm W:40cm H:36cm GW:8.80kg NW:6.80kg

CARE LABEL

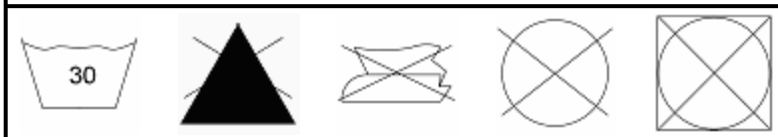

KARIBAN

REFERENCE : K063

NAME : TEAM

SIZES : U

COMPOSITION :

Main fabric : Brushed cotton twill 260 74x44 100%cotton
Main fabric : Brushed cotton twill 260 74x44
For contrasted yokes 100%cotton

WEIGHT :

Main fabric : 260 gsm
Main fabric : 260 gsm

FABRIC CONSTRUCTION AND FINISHING :

74x44

COLORS	PANTONE SERIGRAPHIE
Black / Orange	Black / 1505C
Red / Black	186C / Black
Navy / Royal blue	539C / 294C
White / Red	White / 186C
Black / Green	Black / 362C

DESCRIPTION

Français :	Casquette bicolore
English :	Bi-colour cap
Nederlands :	Tweekleurige pet
Deutsch :	Zweifarbige Kappe
Español :	Gorra bicolor
Italiano :	Cappellino bicolore
Português :	Boné bicolor de 6 painéis

deetex.de

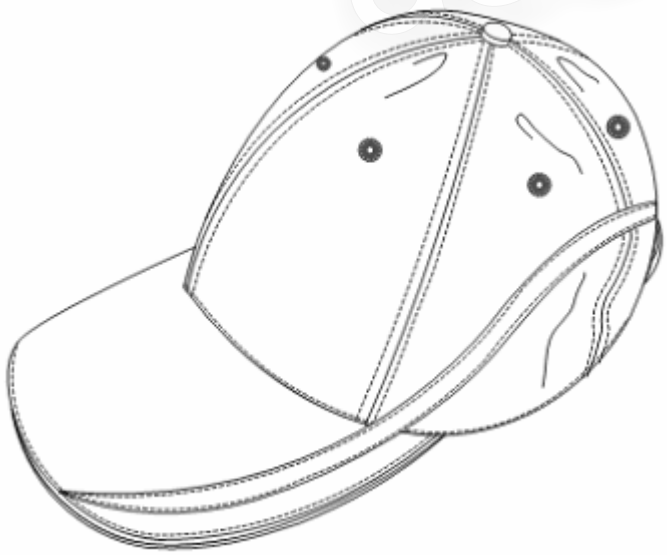

MEASUREMENT

Description	U						
H10 Tour de tête / Head measurement	58						

PACKING

Box	100 pcs / box U => L:51cm W:40cm H:36cm GW:10.00kg NW:8.00kg

CARE LABEL

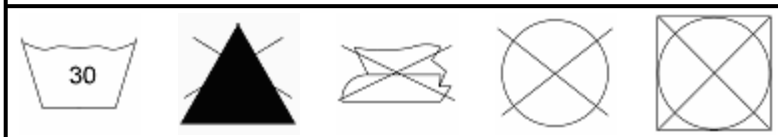

KARIBAN

REFERENCE : K064

NAME : FIESTA

SIZES : U

COMPOSITION :

Main fabric : Polycotton 80/20 - 95 96x72 80%polyester / 20%cotton

WEIGHT :

Main fabric : 95 gsm

COLORS	PANTONE SERIGRAPHIE
Black	Black
Red	186C
White	White
Orange	1505C
Yellow	12C
Light royal blue	294C
Green	362C
Olive	7498C

DESCRIPTION

Français :	Bandana
English :	Bandana
Nederlands :	Bandana
Deutsch :	Bandana
Español :	Bandana
Italiano :	Bandana
Português :	Lenço

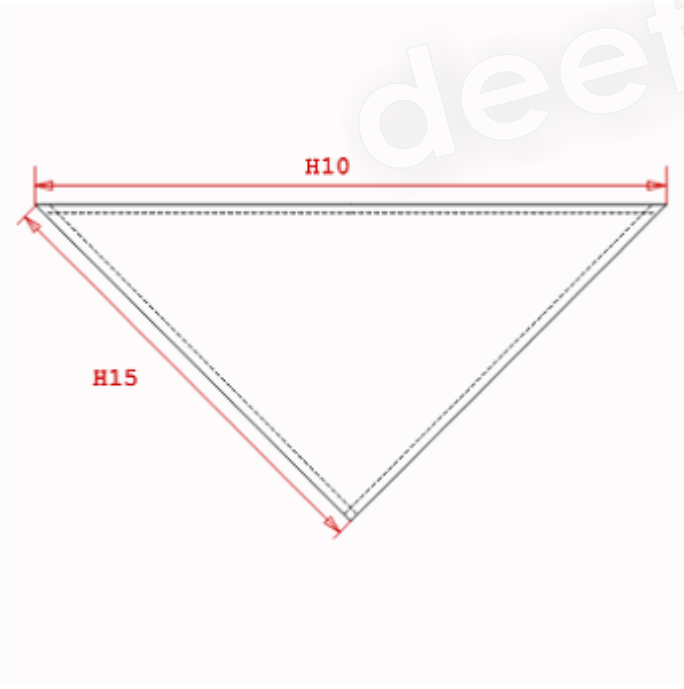

MEASUREMENT

Description	U						
H10 Longueur encolure / Neckline measurement	83						
H15 Longueur côté / Side length	62						

PACKING

Box	300 pcs / box U => L:32cm W:32cm H:27cm GW:6.50kg NW:6.00kg

CARE LABEL

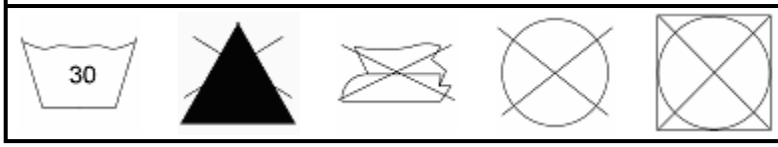

KARIBAN

REFERENCE : K065

NAME : BAND

SIZES : U

COMPOSITION :

Main fabric : Polyester / Elastane 110 95%polyester / 5%elastane

COLORS	PANTONE SERIGRAPHIE
Black	Black
Lagoon	2915C
Khaki	448C
Red	186C

WEIGHT :

Main fabric : 110 gsm

DESCRIPTION	
Français :	Bandeau multifonctions
English :	Multi function band
Nederlands :	Multifunctionele haarband
Deutsch :	Multifunktions-Ohrenwärmer
Español :	Cinta multifunción
Italiano :	Passata multifunzioni
Português :	Banda multifunções

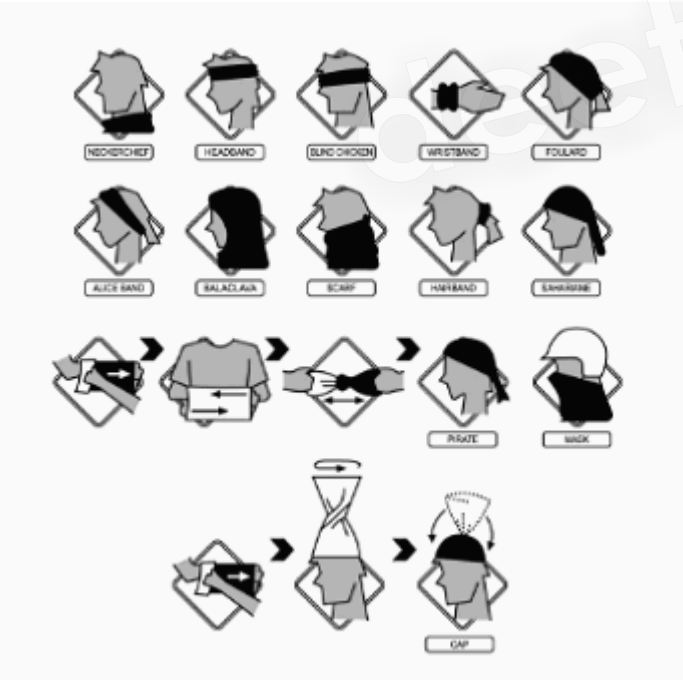

MEASUREMENT							
Description	**U**						

PACKING	
Box	200 pcs / box U => L:30cm W:30cm H:35cm GW:8.00kg NW:7.00kg

CARE LABEL

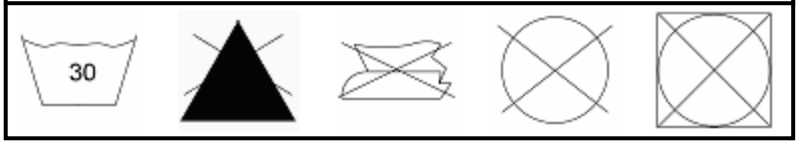

KARIBAN

REFERENCE : K066

NAME : PANAMA

SIZES : 57cm_59cm

COLORS	PANTONE SERIGRAPHIE
Natural	7501C

COMPOSITION :

Main fabric : Cellulose 245 100%cellulose

WEIGHT :

Main fabric : 245 gsm

DESCRIPTION	
Français :	Chapeau panama avec ruban amovible
English :	Panama hat with removable contrast band
Nederlands :	Panama hoed met afneembaar lint
Deutsch :	Panama Hut mit Abnehmbarem Band
Español :	Sombrero Panama
Italiano :	Cappello Panama con nastro amovibile
Português :	Panama com fita colorida amovivel

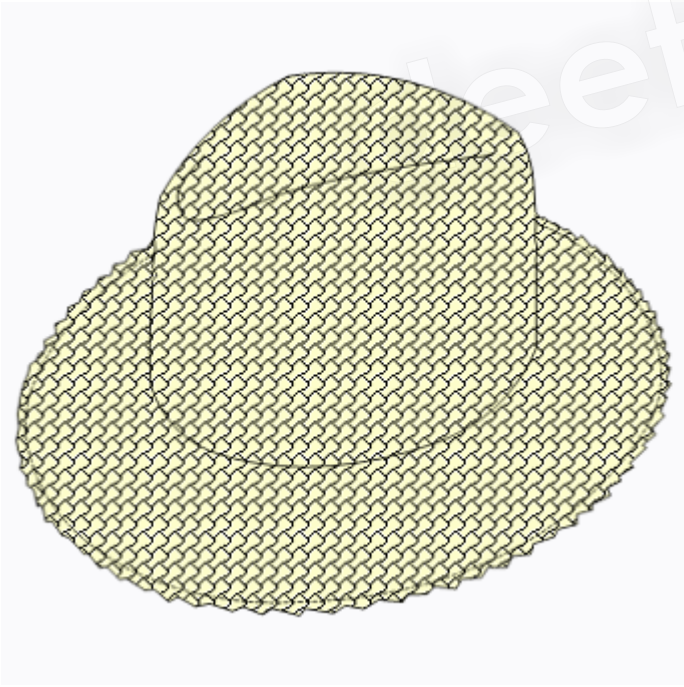

MEASUREMENT							
Description	**57cm**	**59cm**					
H10 Tour de tête / Head measurement	**57**	**59**					

PACKING	
Box	50 pcs / box 57cm => L:37cm W:34cm H:48cm GW:3.00kg NW:2.00kg 59cm => L:37cm W:34cm H:48cm GW:3.00kg NW:2.00kg

CARE LABEL

KARIBAN

REFERENCE : K066B

NAME : BAND FOR PANAMA

SIZES : U

COMPOSITION :
Main fabric : Polyester 100%polyester

WEIGHT :
Main fabric :

COLORS	PANTONE SERIGRAPHIE
Red	186C
Black	Black
Orange	1505C
Yellow	12C
Royal blue	294C
Green	362C
Khaki	448C
White	White

DESCRIPTION

Français :	Ruban amovible pour Panama
English :	Removable colour ribbon for Panama hat
Nederlands :	Afneembaar lint voor Panama
Deutsch :	Abnehmbares Band für Panama Hut
Español :	Cinta amovible para sombrero Panama
Italiano :	Nastro amovibile per Panama
Português :	Fita amovível para panamá

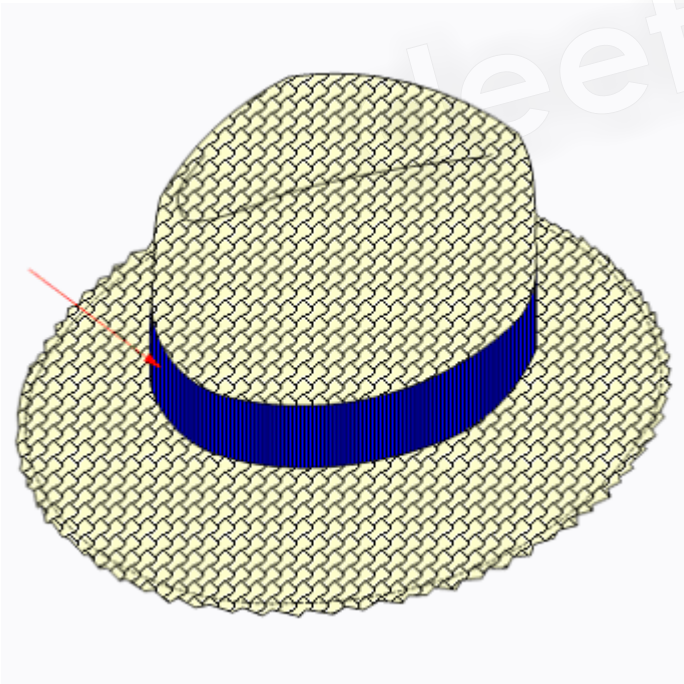

MEASUREMENT

Description	U						
H10 Longueur bande / Band length	66						
W05 Lageur band / Band width	3,50						

PACKING

Box	300 pcs / box U => L:29cm W:18cm H:21cm GW:2.00kg NW:1.70kg

CARE LABEL

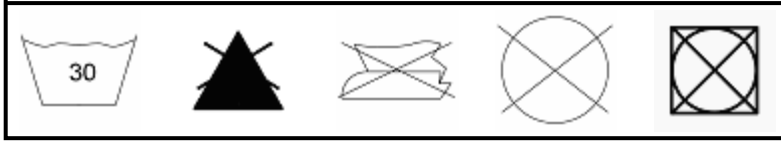

KARIBAN

REFERENCE : K111

NAME : BEACH TOWEL

SIZES : U

COMPOSITION :
Main fabric : Terry 450 100%cotton

WEIGHT :
Main fabric : 450 gsm

COLORS	PANTONE SERIGRAPHIE
White	White
Azur blue	284C
Forest green	553C
Mastic	480C
Navy	539C
Red	186C
Straw yellow	1205C
Burnt orange	166C
Dark grey	432C
Chocolate	476C
Pale pink	706C
Light grey	Warm grey 2C
Smoky lavender	436C
Bordeaux	505C
Black	Black

DESCRIPTION

Français :	Drap de bain
English :	Beach towel
Nederlands :	Badhanddoek
Deutsch :	Badelaken
Español :	Toalla de playa
Italiano :	Asciugamano da spiaggia
Português :	Toalha de praia

deetex.de

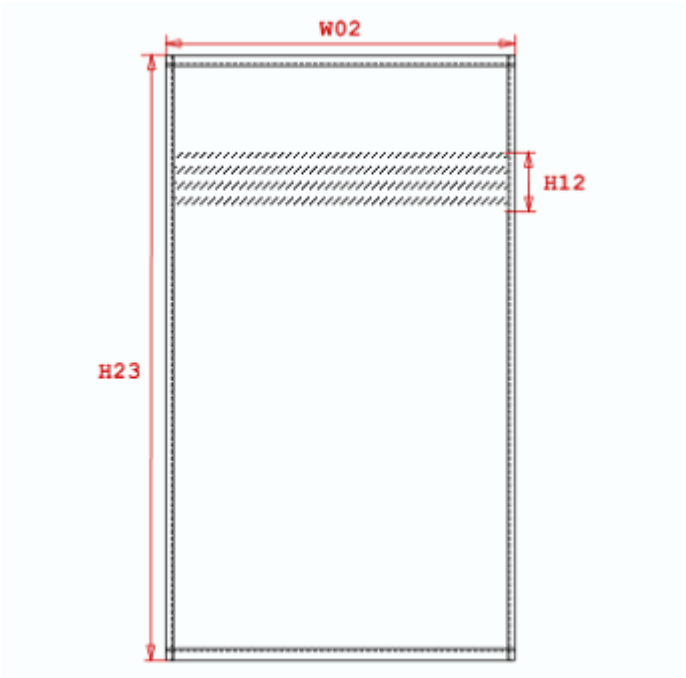

MEASUREMENT

Description	U						
H23 Longueur serviette / Towel length	150						
W02 Largeur serviette / Towel width	100						
H12 Hauteur liteau / Border height	8						

PACKING

Box	20 pcs / box U => L:40cm W:60cm H:40cm GW:12.40kg NW:11.30kg

CARE LABEL

KARIBAN

REFERENCE : K112

NAME : TOWEL

SIZES : U

COMPOSITION :
Main fabric : Terry 450 100%cotton

WEIGHT :
Main fabric : 450 gsm

COLORS	PANTONE SERIGRAPHIE
White	White
Azur blue	284C
Forest green	553C
Mastic	480C
Navy	539C
Red	186C
Straw yellow	1205C
Burnt orange	166C
Dark grey	432C
Chocolate	476C
Pale pink	706C
Light grey	Warm grey 2C
Smoky lavender	436C
Bordeaux	505C
Black	Black

DESCRIPTION

Français :	Serviette de toilette
English :	Hand towel
Nederlands :	Handdoek
Deutsch :	Handtuch
Español :	Toalla
Italiano :	Asciugamano
Português :	Toalha de rosto

deetex.de

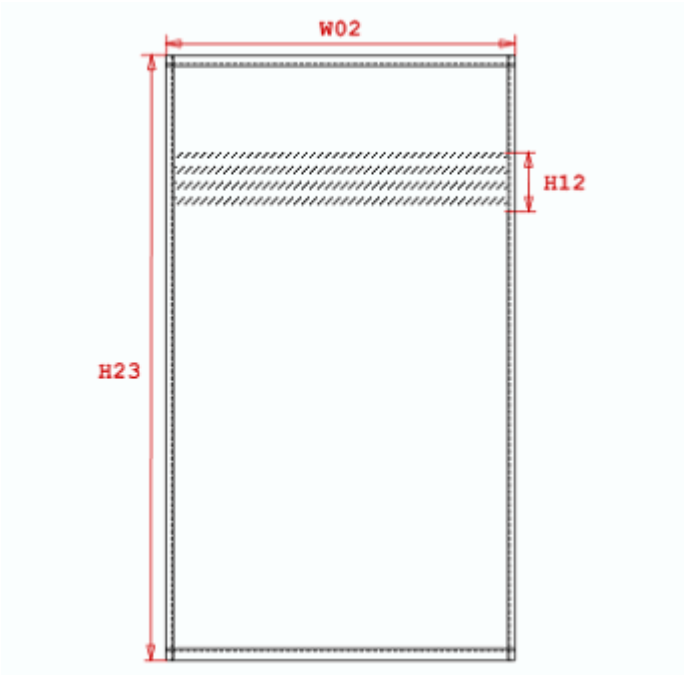

MEASUREMENT

Description	U						
H23 Longueur serviette / Towel length	100						
W02 Largeur serviette / Towel width	50						
H12 Hauteur liteau / Border height	8						

PACKING

Box	50 pcs / box U => L:40cm W:60cm H:40cm GW:12.40kg NW:11.30kg

CARE LABEL

KARIBAN

REFERENCE : K113

NAME : BATH TOWEL

SIZES : U

COMPOSITION :
Main fabric : Terry 450 100%cotton

WEIGHT :
Main fabric : 450 gsm

COLORS	PANTONE SERIGRAPHIE
White	White
Azur blue	284C
Forest green	553C
Mastic	480C
Navy	539C
Red	186C
Straw yellow	1205C
Burnt orange	166C
Dark grey	432C
Chocolate	476C
Pale pink	706C
Light grey	Warm grey 2C
Smoky lavender	436C
Bordeaux	505C
Black	Black

DESCRIPTION

Français :	Drap de bain
English :	Bath towel
Nederlands :	Strandlaken
Deutsch :	Badetuch
Español :	Toalla de baño
Italiano :	Asciugamano da bagno
Português :	Toalha de banho

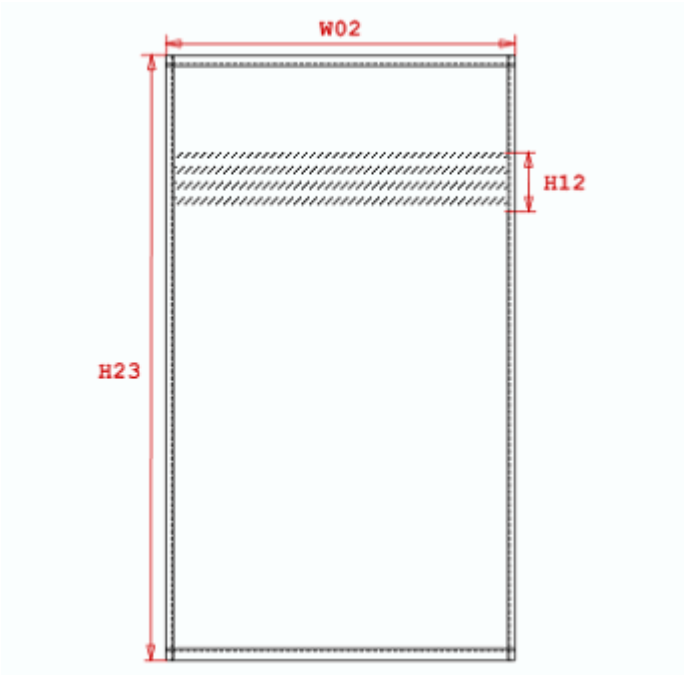

MEASUREMENT

Description	U						
H23 Longueur serviette / Towel length	140						
W02 Largeur serviette / Towel width	70						
H12 Hauteur liteau / Border height	8						

PACKING

Box	20 pcs / box U => L:40cm W:60cm H:40cm GW:12.40kg NW:11.30kg

CARE LABEL

deetex.de

KARIBAN

REFERENCE : K114

NAME : GOLF TOWEL

SIZES : U

COMPOSITION :
Main fabric : Terry 450 100%cotton

WEIGHT :
Main fabric : 450 gsm

COLORS	PANTONE SERIGRAPHIE
White	White
Forest green	553C
Mastic	480C
Navy	539C
Red	186C
Bordeaux	505C
Black	Black

DESCRIPTION

Français :	Serviette de golf
English :	Golf towel with side hook
Nederlands :	Golfhanddoek
Deutsch :	Golf tuch
Español :	Toalla de golf
Italiano :	Asciugamano da golf con anello laterale
Português :	Toalha de golfe

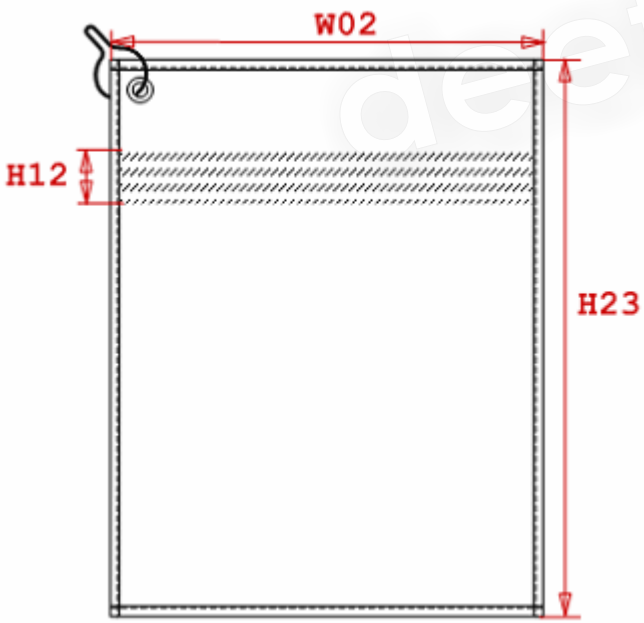

MEASUREMENT

Description	U						
H23 Longueur serviette / Towel length	50						
W02 Largeur serviette / Towel width	30						
H12 Hauteur liteau / Border height	3,50						

PACKING

Box	150 pcs / box U => L:40cm W:60cm H:40cm GW:11.20kg NW:10.10kg

CARE LABEL

KARIBAN

REFERENCE : K115

NAME : BATHROBE

SIZES : L_XL

COMPOSITION :
Main fabric : Terry 400 100%cotton

COLORS	PANTONE SERIGRAPHIE
Navy	539C
White	White

WEIGHT :
Main fabric : 400 gsm

DESCRIPTION

Français :	Peignoir col kimono
English :	Kimono towel robe
Nederlands :	Badjas met kimonohals
Deutsch :	Kimonobademantel
Español :	Albornoz col kimono
Italiano :	Accappatoio a kimono
Português :	Robe kimono

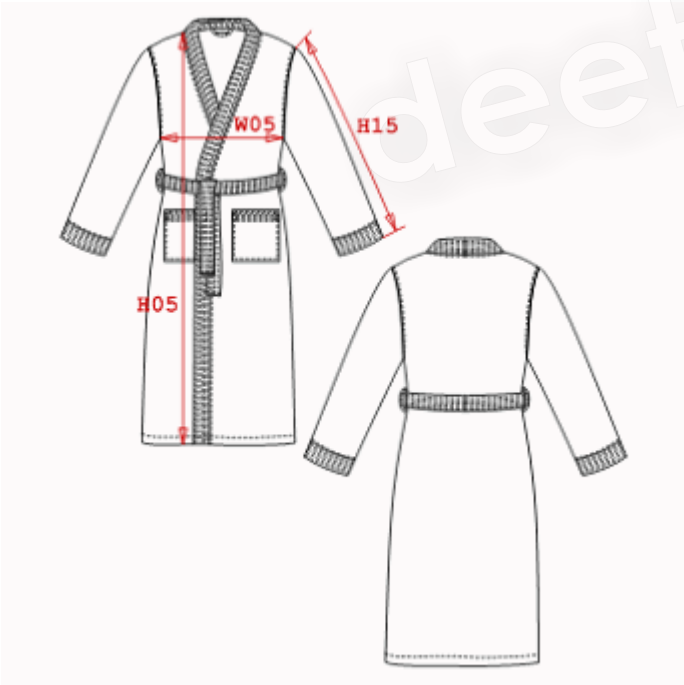

MEASUREMENT

Description	L	XL					
W05 1/2 largeur poitrine / 1/2 chest width	55	57					
H05 Hauteur totale / Total height	122	127					
H15 Longueur manche / Sleeve length	55	55					

PACKING

Box	10 pcs / box S-XL => L:40cm W:60cm H:40cm GW:13.00kg NW:12.00kg

CARE LABEL

deeteX.de

KARIBAN

REFERENCE : K116

NAME : GOLF TOWEL CENTRAL

SIZES : U

COMPOSITION :
Main fabric : Terry 450 100%cotton

COLORS	PANTONE SERIGRAPHIE
White	White
Forest green	553C
Navy	539C

WEIGHT :
Main fabric : 450 gsm

DESCRIPTION

Français :	Serviette de golf
English :	Golf towel with central hook
Nederlands :	Golfhanddoek met rijggat in het midden
Deutsch :	Golf tuch
Español :	Toalla de golf
Italiano :	Piegato tre volte con anello centrale
Português :	Toalha de golfe

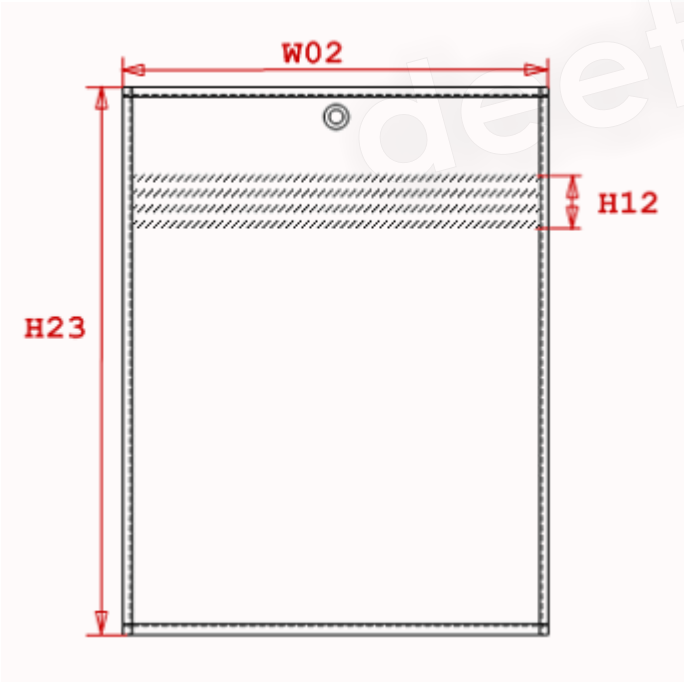

MEASUREMENT

Description	U						
H23 Longueur serviette / Towel length	50						
W02 Largeur serviette / Towel width	30						
H12 Hauteur liteau / Border height	3,50						

PACKING

Box	150 pcs / box

CARE LABEL

KARIBAN

REFERENCE : K118

NAME : VELOURS

SIZES : U

COMPOSITION :
Main fabric : Velour terry 400 100%cotton

WEIGHT :
Main fabric : 400 gsm

COLORS	PANTONE SERIGRAPHIE
Turquoise / White	3115C / White
Orange / White	158C / White
Beige / White	7735C / White
Light grey / White	422C / White
Navy / White	296C / White
Lime / White	368C / White
Fuschia / White	225C / White

DESCRIPTION

Français :	Drap de bain
English :	Velour beach towel
Nederlands :	Fluwelen strandlaken
Deutsch :	Samt-badelaken
Español :	Toalla de playa de terciopelo
Italiano :	Asciugamano da spiaggia aspetto velluto
Português :	Toalha de praia

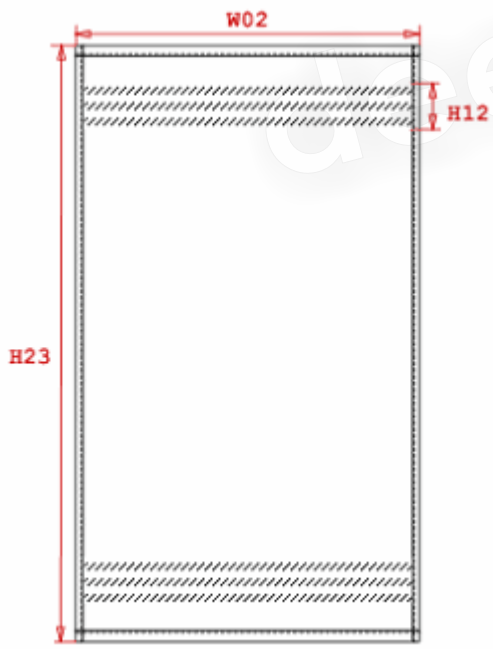

MEASUREMENT

Description	U						
H23 Longueur serviette / Towel length	160						
W02 Largeur serviette / Towel width	100						
H12 Hauteur finition serviette / Towel binding height	5,25						

PACKING

Box	20 pcs / box

CARE LABEL

deetex.de

KARIBAN

REFERENCE : K119

NAME : HOODED BATHROBE

SIZES : L_XL

COMPOSITION :
Main fabric : Velour terry 400 100%cotton

COLORS	PANTONE SERIGRAPHIE
Turquoise	3115C
Beige	7535C
Light grey	422C
White	White

WEIGHT :
Main fabric : 400 gsm

DESCRIPTION

Français :	Peignoir à capuche
English :	Hooded bathrobe
Nederlands :	Fluwelen badjas
Deutsch :	Samt-bademantel
Español :	Albornoz de terciopelo
Italiano :	Accappatoio aspetto velluto
Português :	Robe com capuz

MEASUREMENT

Description	L	XL					
H05 Hauteur totale / Total height	125	128					
W05 1/2 largeur poitrine / 1/2 chest width	60	64					
H15 Longueur manche / Sleeve length	54	57					

PACKING

Box	10 pcs / box Size => L: W: H: GW: NW:

CARE LABEL

fleetex.de

KARIBAN

REFERENCE : K120

NAME :

SIZES : U

COMPOSITION :

Main fabric : Jacquard terry 360 100%cotton

COLORS	PANTONE SERIGRAPHIE
White	White
Anis	610C
Linen	7501C
Lavender	278C

WEIGHT :

Main fabric : 360 gsm

FABRIC CONSTRUCTION AND FINISHING :

Honeycombe design

DESCRIPTION	
Français :	Essuie-mains éponge jacquard ciselé
English :	Kitchen tea towel
Nederlands :	Handdoeken afgewerkt met effen jacquard
Deutsch :	Jacquard frottee handtuch
Español :	Paño de felpa para manos
Italiano :	Asciugmano da spiaggia aspetto velluto a righe
Português :	Toalha de cozinha

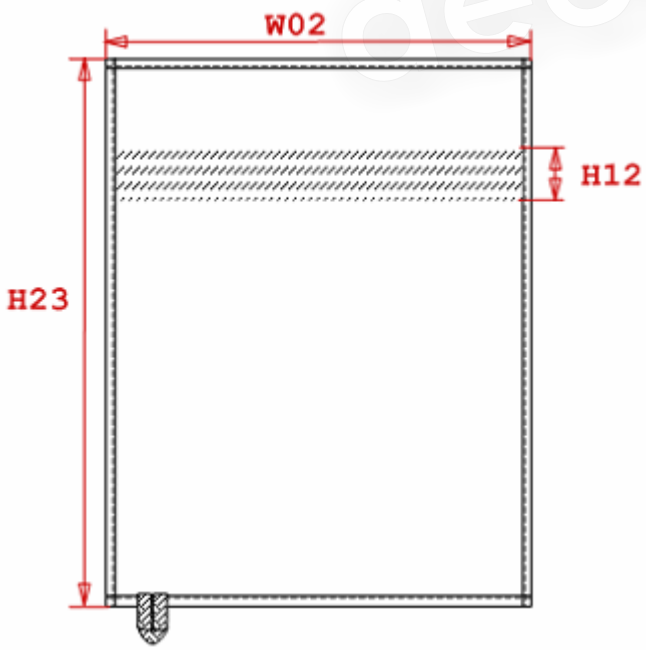

MEASUREMENT							
Description	**U**						
H23 Longueur serviette / Towel length	70						
W02 Largeur serviette / Towel width	50						
H12 Hauteur liteau / Border height	8,50						

PACKING	
Box	80 pcs / box

CARE LABEL

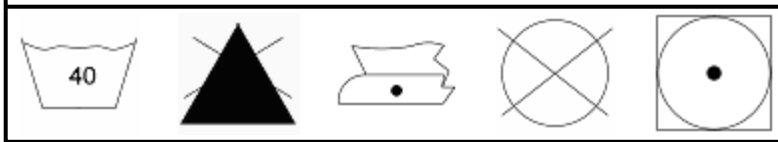

deetex.de

KARIBAN

REFERENCE : K121

NAME : VELOURS RAYÉ

SIZES : U

COMPOSITION :
Main fabric : Velour terry 400 100%cotton

COLORS	PANTONE SERIGRAPHIE
Black/Orange/ White/ Chocolate	Black/7417C/White/ Black5C
Grey/Red/White/Navy	7544C/186C/White/2955C

WEIGHT :
Main fabric : 400 gsm

DESCRIPTION	
Français :	Drap de plage velours rayé
English :	Velour striped beach towel
Nederlands :	Fluweel gestreept strandlaken
Deutsch :	Velours badelaken
Español :	Toalla de playa de rizo de terciopelo a rayas
Italiano :	Asciugmano da spiaggia aspetto velluto a righe
Português :	Toalha de praia de veludo as riscas

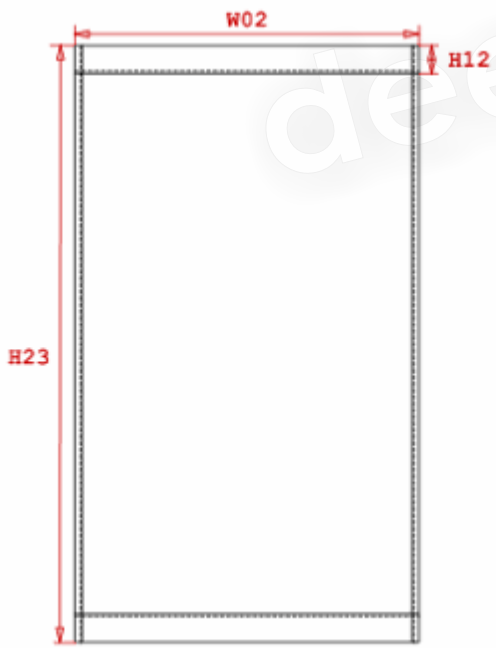

MEASUREMENT

Description	U						
H23 Longueur serviette / Towel length	180						
W02 Largeur serviette / Towel width	90						
H12 Hauteur finition serviette / Towel binding height	3						

PACKING

Box	15 pcs / box U => L:60cm W:40cm H:40cm GW:13.30kg NW:12.30kg

CARE LABEL

deetex.de

KARIBAN

REFERENCE : K122

NAME :

SIZES : M/L_L/XL

COMPOSITION :

Main fabric : Cotton waffle 220 100%cotton

COLORS	PANTONE SERIGRAPHIE
White	White
Black	Black

WEIGHT :

Main fabric : 220 gsm

DESCRIPTION	
Français :	Peignoir kimono nid d'abeille
English :	Waffle robe
Nederlands :	Kamerjas 'kimono' honingraat
Deutsch :	Wafel bademantel
Español :	Albornoz kimono punto nido de abeja
Italiano :	Accappatoio kimono
Português :	Robe favo de mel

MEASUREMENT

Description	M/L	L/XL					
H05 Hauteur totale / Total height	117	124					
W05 1/2 largeur poitrine / 1/2 chest width	60	64					
H15 Longueur manche / Sleeve length	55	58					

PACKING	
Box	30 pcs / box Size => L: W: H: GW: NW:

CARE LABEL

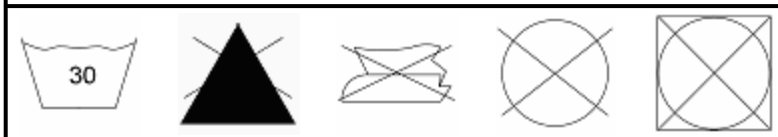

fleetex.de

KARIBAN

REFERENCE : K123

NAME :

SIZES : U

COLORS	PANTONE SERIGRAPHIE
White	White

COMPOSITION :

Main fabric : Terry 420 100%cotton

WEIGHT :

Main fabric : 420 gsm

DESCRIPTION	
Français :	Paréo
English :	Shower wrap
Nederlands :	Paréo
Deutsch :	Paréo
Español :	Pareo
Italiano :	Pareo
Português :	Pareo

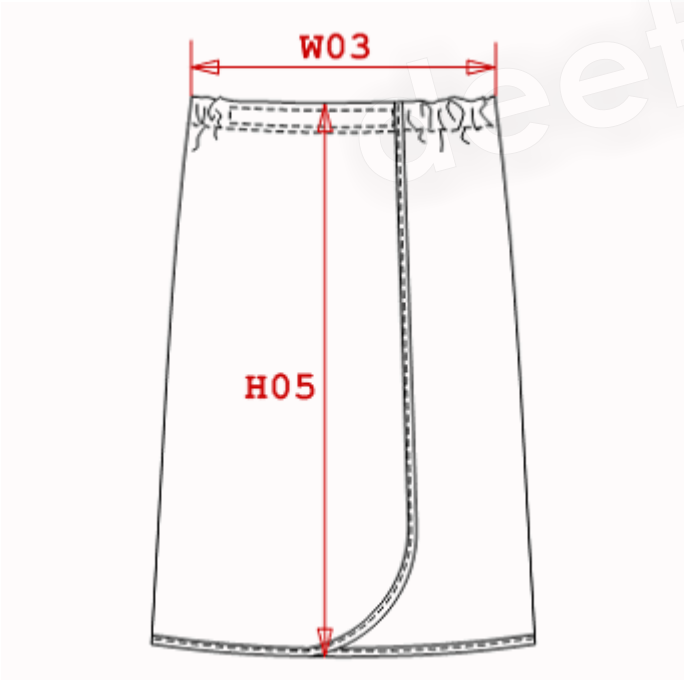

MEASUREMENT							
Description	**U**						
H05 Hauteur totale / Total height	72						
W03 1/2 largeur du haut élastiquée / 1/2 elasticated top width	36						

PACKING	
Box	25 pcs / box 100x150 => L:60cm W:40cm H:40cm GW:1.46kg NW:1.30kg

CARE LABEL

KARIBAN

REFERENCE : K201

NAME : SYDNEY

SIZES : S_M_L_XL_XXL_3XL

COMPOSITION :

Main fabric : Combed cotton single jersey 280 100%cotton
Fabric 2 : Twill 240 For collar, collar band, under tab and sleeve band 100%polyester

WEIGHT :

Main fabric : 280 gsm
Fabric 2 : 240 gsm

COLORS	PANTONE SERIGRAPHIE
Deep Orange / White	021C / White
Royal blue / White	287C / White
Navy / White	2965C / White
Red / White	186C / White
Sky blue / White	277C / White
Black / White	Black / White

DESCRIPTION

Français :	Polo de rugby manches longues
English :	Long sleeve rugby polo
Nederlands :	Rugbypolo met lange mouwen
Deutsch :	Langärmliges Rugby Polohemd
Español :	Polo rugby de manga larga
Italiano :	Polo rugby maniche lunghe
Português :	Polo rugby de manga comprida

MEASUREMENT

Description	S	M	L	XL	2XL	3XL	
H05 Hauteur totale / Total height	71	73	75	77	79	81	
W05 1/2 largeur poitrine / 1/2 chest width	52	55	58	61	64	67	
H15 Longueur manche / Sleeve length	76,50	79,25	82	84,75	87,50	90,25	

PACKING

Box	25 pcs / box S => L:58cm W:38cm H:21cm GW:12.20kg NW:10.20kg M => L:58cm W:38cm H:21cm GW:12.20kg NW:10.20kg L => L:58cm W:40cm H:21cm GW:14.00kg NW:12.00kg XL => L:58cm W:40cm H:21cm GW:14.00kg NW:12.00kg XXL => L:66cm W:42cm H:21cm GW:15.00kg NW:13.00kg 3XL => L:66cm W:42cm H:21cm GW:15.00kg NW:13.00kg

CARE LABEL

KARIBAN

REFERENCE : K202

NAME : SYDNEY KIDS

SIZES : 6/8_8/10_10/12_12/14

COMPOSITION :

Main fabric : Combed cotton single jersey 280 100%cotton
Fabric 2 : Twill 240 For collar, collar band, under tab and sleeve band 100%polyester

WEIGHT :

Main fabric : 280 gsm
Fabric 2 : 240 gsm

COLORS	PANTONE SERIGRAPHIE
Deep Orange / White	021C / White
Royal blue / White	287C / White
Navy / White	2965C / White
Red / White	186C / White
Sky blue / White	277C / White
Black / White	Black / White

DESCRIPTION

Français :	Polo de rugby manches longues
English :	Long sleeve rugby polo
Nederlands :	Rugbypolo met lange mouwen
Deutsch :	Langärmliges Rugby Polohemd
Español :	Polo rugby de manga larga
Italiano :	Polo rugby maniche lunghe
Português :	Polo Sydney de criança

MEASUREMENT

Description	6/8	8/10	10/12	12/14			
H05 Hauteur totale / Total height	61,35	63,80	66,25	68,70			
W05 1/2 largeur poitrine / 1/2 chest width	40	43	46	49			
H15 Longueur manche / Sleeve length	58	62	66	70			

PACKING

Box	25 pcs / box 6/8=> L:46cm W:32cm H:22cm GW:8.00kg NW:7.00kg 8/10 => L:48cm W:32cm H:22cm GW:9.00kg NW:8.00kg 10/12 => L:50cm W:34cm H:23cm GW:9.50kg NW:8.50kg 12/14 => L:50cm W:34cm H:23cm GW:10.50kg NW:9.50kg

CARE LABEL

fleetex.de

KARIBAN

REFERENCE : K203

NAME : JAMES

SIZES : S_M_L_XL_XXL_3XL

COMPOSITION :

Main fabric : Combed cotton single jersey 280 100%cotton
Fabric 2 : Twill 200 100%cotton

COLORS	PANTONE SERIGRAPHIE
Black	Black
Navy	2965C

WEIGHT :

Main fabric : 280 gsm
Fabric 2 : 200 gsm

DESCRIPTION

Français :	Polo de rugby manches longues uni
English :	Long sleeve rugby shirt
Nederlands :	Rugbypolo met lange mouwen
Deutsch :	Rugby langarm-polohemd
Español :	Polo rugby liso de manga larga
Italiano :	Polo rugby maniche lunghe unito
Português :	Polo rugby manga comprida

MEASUREMENT

Description	S	M	L	XL	XXL	3XL	
H05 Hauteur totale / Total height	71,30	73,40	75,45	77,50	79,60	82,45	
W05 1/2 largeur poitrine / 1/2 chest width	52	55	58	61	64	68	
H15 Longueur manche / Sleeve length	70,65	73,35	76,05	78,70	81,40	84,60	

PACKING

Box	20 pcs / box S => L:55cm W:40cm H:17cm GW:10.00kg NW:8.50kg M => L:50cm W:41cm H:17cm GW:10.00kg NW:8.50kg L => L:60cm W:41cm H:17cm GW:11.00kg NW:9.25kg XL => L:60cm W:41cm H:17cm GW:11.00kg NW:9.25kg XXL => L:64cm W:42cm H:17cm GW:12.00kg NW:10.00kg 3XL => L:64cm W:42cm H:17cm GW:12.00kg NW:10.00kg

CARE LABEL

deeflex.de

KARIBAN

REFERENCE : K204

NAME : WALTER

SIZES : S_M_L_XL_XXL_3XL

COMPOSITION :

Main fabric : Combed cotton single jersey 280 100%cotton
Main fabric : Combed cotton single jersey 280 For contrasted yokes 100%cotton
Fabric 2 : Twill 200 For collar, collar band and front placket 100%cotton

WEIGHT :

Main fabric : 280 gsm
Main fabric : 280 gsm
Fabric 2 : 200 gsm

COLORS	PANTONE SERIGRAPHIE
Orange / White	1505C / White
Sky blue / White	277C / White
Red / White	186C / White
Navy / White	2965C / White
Black / Grey	Black / 7539C
Navy / Pink	2965C / 706C
Navy / Sky blue	2965C / 277C

DESCRIPTION

Français :	Polo de rugby manches longues rayé bicolore
English :	Sewn stripe long sleeve rugby shirt
Nederlands :	Tweekleurig gestreepte polo met lange mouwen
Deutsch :	Zweifarbig-gestreiftes rugby langarm-shirt
Español :	Polo rugby a rayas bicolor de manga larga
Italiano :	Polo rugby maniche lunghe bicolore a righe
Português :	Polo rugby manga comprida

MEASUREMENT

Description	S	M	L	XL	XXL	3XL	
H05 Hauteur totale / Total height	71,30	73,40	75,45	77,50	79,60	82,45	
W05 1/2 largeur poitrine / 1/2 chest width	51	55	58	61	64	68	
H15 Longueur manche / Sleeve length	70,65	73,35	76,05	78,70	81,40	84,60	

PACKING

Box	20 pcs / box S => L:56cm W:40cm H:18cm GW:9.50kg NW:8.00kg M => L:56cm W:40cm H:18cm GW:10.00kg NW:8.50kg L => L:60cm W:42cm H:18cm GW:11.50kg NW:10.00kg XL => L:60cm W:42cm H:18cm GW:12.00kg NW:10.50kg XXL => L:65cm W:42cm H:20cm GW:12.50kg NW:11.00kg 3XL => L:65cm W:42cm H:20cm GW:13.00kg NW:11.50kg

CARE LABEL

deelex.de

KARIBAN

REFERENCE : K205

NAME : JERSEY POLO LS

SIZES : S_M_L_XL_XXL

COMPOSITION :
Main fabric : Combed cotton jersey 180 100%cotton

WEIGHT :
Main fabric : 180 gsm

COLORS	PANTONE SERIGRAPHIE
Black	Black
Navy	2965C
Red	186C
Sky blue	277C
White	White
Khaki	5797C

DESCRIPTION

Français :	Polo jersey manches longues
English :	Long sleeve polo jersey
Nederlands :	Jersey polo met lange mouwen
Deutsch :	Jersey langarm-polohemd
Español :	Polo jersey de manga larga
Italiano :	Polo jersey maniche lunghe
Português :	Polo jersey de manga comprida

MEASUREMENT

Description	S	M	L	XL	XXL		
H05 Hauteur totale / Total height	70,40	72,40	74,40	76,30	78,80		
W05 1/2 largeur poitrine / 1/2 chest width	50	53	56	59	63		
H15 Longueur manche / Sleeve length	62,10	64,05	66	67,95	70,10		

PACKING

Box	25 pcs / box S => L:56cm W:38cm H:15cm GW:7.40kg NW:5.80kg M => L:56cm W:38cm H:15cm GW:7.80kg NW:6.20kg L => L:60cm W:40cm H:15cm GW:8.20kg NW:6.60kg XL => L:60cm W:40cm H:15cm GW:8.60kg NW:7.00kg XXL => L:60cm W:40cm H:15cm GW:9.40kg NW:7.80kg

CARE LABEL

deeter.de

KARIBAN

REFERENCE : K206

NAME : TRUCKER

SIZES : M_L_XL_XXL_3XL

COMPOSITION :

Main fabric : Cotton / Polyester Pique 300 80%cotton / 20%polyester
Main fabric : Contrasted Cotton / Polyester Pique 300 For back facing, front facing and inner collar. 80%cotton / 20%polyester

WEIGHT :

Main fabric : 300 gsm
Main fabric : 300 gsm

COLORS	PANTONE SERIGRAPHIE
Black / Heather grey	Black / Cool grey 5C
Navy / Heather grey	2965C / Cool grey 5C
Heather grey / Navy	Cool grey 5C / 2965C

DESCRIPTION

Français :	Sweat-shirt col zippé
English :	Sweatshirt
Nederlands :	Sweat met zip kraag
Deutsch :	Zip-neck sweat-shirt
Español :	Sudadera media cremallera
Italiano :	Felpa collo con zip
Português :	Sweatshirt com meio fecho

MEASUREMENT

Description	M	L	XL	XXL	3XL		
H05 Hauteur totale sans BC / Total height without rib	68,50	70,50	72,50	75,25	78		
W05 1/2 largeur poitrine / 1/2 chest width	55,25	58,25	61,25	65,25	69,25		
H15 Longueur manche sans BC / Sleeve length without rib	57,50	59	60,50	62,70	64,90		

PACKING

Box	20 pcs / box M => L:68.5cm W:46cm H:23cm GW:10.80kg NW:9.00kg L => L:68.5cm W:46cm H:23cm GW:11.30kg NW:9.50kg XL => L:68.5cm W:46cm H:23cm GW:11.60kg NW:9.80kg XXL => L:68.5cm W:46cm H:23cm GW:12.60kg NW:10.80kg 3XL => L:68.5cm W:46cm H:23cm GW:13.10kg NW:11.30kg

CARE LABEL

KARIBAN

REFERENCE : K221

NAME : FRENCH RIB

SIZES : M_L_XL_XXL

COMPOSITION :

Main fabric : French rib 330 - cotton 100%cotton
Main fabric : French rib 330 - cotton/viscose 85%cotton / 15%viscose
Fabric 1 : Twill 220 For under collar and concelead buttoned placket 100%cotton
Fabric 2 : Denim 220 For under collar and concelead buttoned placket 100%cotton

WEIGHT :

Main fabric : 330 gsm
Main fabric : 330 gsm
Fabric 1 : 220 gsm
Fabric 2 : 220 gsm

COLORS	PANTONE SERIGRAPHIE
Black / Dark grey	Black / 447C
Chocolate / Black	4975C / Black
Navy / Jean	2965C / Jean
Grey / Dark grey	7539C / 447C

DESCRIPTION

Français :	Polo manches longues
English :	French rib polo sweatshirt
Nederlands :	Polo met lange mouwen
Deutsch :	Langarm polohemd
Español :	Polo de manga larga
Italiano :	Polo uomo maniche lunghe
Português :	Polo de manga comprida

MEASUREMENT

Description	M	L	XL	2XL			
H05 Hauteur totale dvt / Front total height	74	77	80	83			
W05 1/2 largeur poitrine / 1/2 chest width	55	58	61	64			
H15 Longueur manche / Sleeve length	54,75	57	59,25	61,50			

PACKING

Box	25 pcs / box M => L:62cm W:40cm H:30cm GW:14.30kg NW:12.50kg L => L:62cm W:40cm H:30cm GW:15.00kg NW:13.20kg XL => L:62cm W:40cm H:33cm GW:16.00kg NW:14.00kg XXL => L:62cm W:40cm H:33cm GW:16.00kg NW:14.00kg

CARE LABEL

deetex.de

KARIBAN

REFERENCE : K226

NAME : POLO BASEBALL

SIZES : S_M_L_XL_XXL_3XL_4XL

COMPOSITION :

Main fabric : Cotton Pique 200 For body 100%cotton
Main fabric : Cotton Pique 200 For contrasted sleeve 100%cotton

WEIGHT :

Main fabric : 200 gsm
Main fabric : 200 gsm

FABRIC CONSTRUCTION AND FINISHING :

Size 4XL only for Navy/Light grey/White - Red/Light grey/White and Black/Light grey/Red

DESCRIPTION	
Français :	Polo base ball
English :	Polo base ball
Nederlands :	Baseball polohemd
Deutsch :	Polo baseball
Español :	Polo baseball
Italiano :	Polo baseball
Português :	Polo de homem bicolor

deetex.de

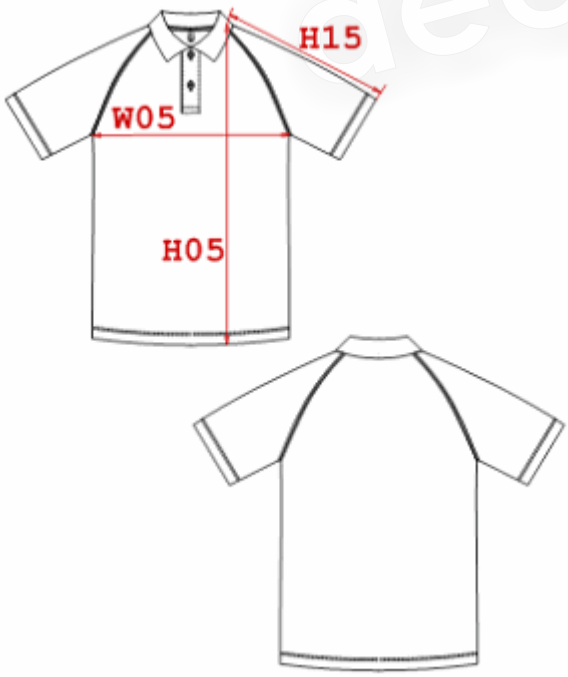

MEASUREMENT							
Description	**S**	**M**	**L**	**XL**	**XXL**	**3XL**	**4XL**
H05 Hauteur totale / Total height	**70,55**	**72,65**	**74,80**	**76,90**	**79,05**	**81,95**	**84,90**
W05 1/2 largeur poitrine / 1/2 chest width	**50,10**	**53,10**	**56,10**	**59,10**	**62,10**	**66,10**	**70,10**
H15 Longueur manche / Sleeve length	**36,80**	**38,80**	**40,80**	**42,80**	**44,80**	**47,30**	**49,80**

PACKING	
Box	25 pcs / box S-M => L:53cm W:39cm H:17cm GW:7.60kg NW:6.10kg L-XL => L:58cm W:41cm H:17cm GW:8.50kg NW:7.00kg XXL-3XL => L:63cm W:42cm H:17cm GW:9.10kg NW:7.60kg 4XL => L:65cm W:42cm H:17cm GW:9.50kg NW:8.00kg

CARE LABEL

KARIBAN

REFERENCE : K226

NAME : POLO BASEBALL

SIZES : S_M_L_XL_XXL_3XL_4XL

COMPOSITION :

Main fabric : Cotton Pique 200 100%cotton
Main fabric : Cotton Pique 200 100%cotton

WEIGHT :

Main fabric : 200 gsm
Main fabric : 200 gsm

FABRIC CONSTRUCTION AND FINISHING :

Size 4XL only for Navy/Light grey/White - Red/Light grey/White and Black/Light grey/Red

COLORS	PANTONE SERIGRAPHIE
Red / Light grey / White	186C / 416C / White
Navy / Light grey / White	2965C / 416C / White
Chocolate / Taupe / Black	4975C / 7531C / Black
Yellow / Light grey / Black	123C / 416C / Black
Pink / Light grey / White	706C / 416C / White
Black / Light grey / Red	Black / 416C / 186C
Orange / Light grey / White	1505C / 416C / White
Royal blue/White/Yellow	287C / White / 123C
Sky blue/Light grey/White	277C / 416C / White
Black / Light grey / White	Black / 416C / White
Slate grey/Light grey/Black	425C / 416C / Black
Forest green/Light grey/White	553C / 416C / White
White/Light grey/ Royal blue	White / 416C / 287C
Bordeaux / Light grey / White	504C / 416C / White
Khaki / Light grey / Black	5743 / 416C / White
Black / Light grey / Green	Black / 416C / 362C
Navy / Light grey / Orange	2965C / 416C / 1505C
Navy / Light grey / Royal blue	2965C / 416C / 287C

deetex

KARIBAN

REFERENCE : K227

NAME : POLO JERSEY

SIZES : S_M_L_XL_XXL_3XL

COMPOSITION :

Main fabric : Combed cotton jersey 180 100%cotton

WEIGHT :

Main fabric : 180 gsm

FABRIC CONSTRUCTION AND FINISHING :

Size 3XL only for Sky blue, White, Black, Navy and Red / Combed jersey

COLORS	PANTONE SERIGRAPHIE
White	White
Black	Black
Corde	7502C
Capuccino	412C
Turquoise	3125C
Light orange	1485C
Pink	706C
Red	186C
Sky blue	277C
Navy	2965C

DESCRIPTION

Français :	Polo homme manches courtes
English :	Short sleeve polo
Nederlands :	Mannenpolo met korte mouwen
Deutsch :	Herren kurzarm-polohemd
Español :	Polo de manga corta
Italiano :	Polo uomo maniche corte
Português :	Polo jersey de manga curta

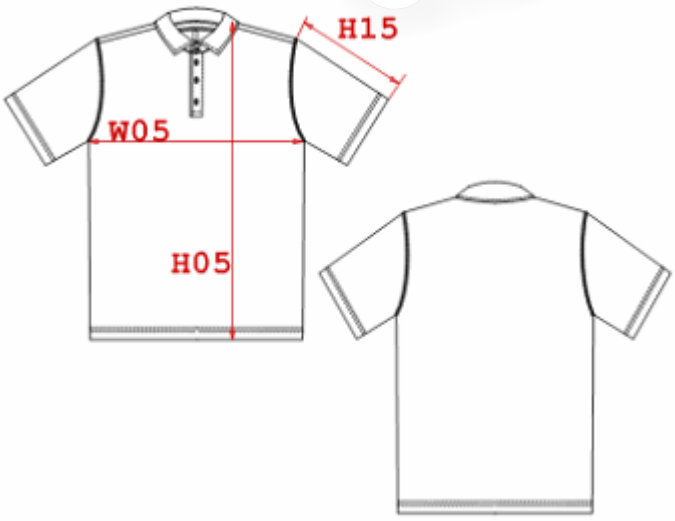

MEASUREMENT

Description	S	M	L	XL	XXL	3XL	
H05 Hauteur totale / Total height	70,60	72,60	74,60	76,60	79,35	82,10	
W05 1/2 largeur poitrine/1/2 chest width	50	53	56	59	63	67	
H15 longueur manche / Sleeve length	21,65	22,65	23,65	24,65	25,85	27,05	

PACKING

Box	25 pcs / box S => L:55cm W:40cm H:13cm GW:5.80kg NW:4.80kg M => L:55cm W:40cm H:13cm GW:6.20kg NW:5.20kg L => L:55cm W:40cm H:13cm GW:6.60kg NW:5.60kg XL => L:55cm W:40cm H:15cm GW:6.80kg NW:5.80kg XXL => L:55cm W:40cm H:17cm GW:7.80kg NW:6.80kg XXXL => L:55cm W:40cm H:17cm GW:9.20kg NW:7.80kg

CARE LABEL

deetex.de

KARIBAN

REFERENCE : K228

NAME : APOLLO

SIZES : S_M_L_XL_XXL_3XL

COMPOSITION :

Main fabric : Cotton / Elastane 190 95%cotton / 5%elastane

WEIGHT :

Main fabric : 190 gsm

COLORS	PANTONE SERIGRAPHIE
Black	Black
Navy	2965C
Dark grey	432C
White	White
Chocolate	439C

DESCRIPTION

Français :	Polo manches longues
English :	Long sleeve polo
Nederlands :	Herenpolo met lange mouwen
Deutsch :	Langarm herren polohemd
Español :	Polo mangas largas
Italiano :	Polo maniche lunghe
Português :	Polo de manga comprida

MEASUREMENT

Description	S	M	L	XL	2XL	3XL	
W05 1/2 largeur poitrine à 3cm sous l'emmanchure / 1/2 chest width at 3cm under armhole	45,75	48,75	51,75	55,75	59,75	63,75	
H05 Hauteur totale / Total height	68	70	72	74,75	77,50	80,25	
H15 Longueur manche / Sleeve length	60,25	62,25	64,25	66,25	68,25	70,25	

PACKING

Box	25 pcs / box S => L:52cm W:37cm H:20cm GW:9.00kg NW:7.00kg M => L:52cm W:37cm H:20cm GW:9.00kg NW:7.00kg L => L:52cm W:37cm H:20cm GW:9.00kg NW:7.00kg XL => L:56cm W:40cm H:20cm GW:9.00kg NW:7.00kg XXL => L:56cm W:40cm H:20cm GW:9.00kg NW:7.00kg

CARE LABEL

deeter.de

KARIBAN

REFERENCE : K229

NAME : GRACE

SIZES : S_M_L_XL

COMPOSITION :

Main fabric : Cotton / Elastane 190 95%cotton / 5%elastane

COLORS	PANTONE SERIGRAPHIE
White	White
Black	Black
Chocolate	439C
Pale pink	705C

WEIGHT :

Main fabric : 190 gsm

DESCRIPTION

Français :	Polo femme manche longues
English :	Ladies long sleeve polo
Nederlands :	Damespolo met lange mouwen
Deutsch :	Langarm damen polohemd
Español :	Polo de manga larga para mujer
Italiano :	Polo donna maniche lunghe
Português :	Polo de manga comprida Grace

MEASUREMENT

Description	S	M	L	XL			
H05 Hauteur totale / Total height	59,75	61,25	62,75	65			
W05 1/2 largeur poitrine / 1/2 chest width	41,45	43,45	45,45	48,45			
H15 Longueur manche / Sleeve length	57,55	58,70	59,85	61,25			

PACKING

Box	25 pcs / box S => L:52cm W:34cm H:18cm GW:6.50kg NW:5.10kg M => L:52cm W:34cm H:18cm GW:6.60kg NW:5.20kg L => L:52cm W:34cm H:18cm GW:6.80kg NW:5.40kg XL => L:52cm W:34cm H:18cm GW:7.25kg NW:5.85kg

CARE LABEL

deeflex.de

KARIBAN

REFERENCE : K231

NAME : POLO BASEBALL KIDS

SIZES : 6/8_8/10_10/12_12/14

COMPOSITION :

Main fabric : Cotton pique 200 For body 100%cotton
Main fabric : Cotton Pique 200 For contrasted sleeve 100%cotton

WEIGHT :

Main fabric : 200gsm
Main fabric : 200 gsm

COLORS	PANTONE SERIGRAPHIE
Black / Light grey / Red	Black / 416C / 186C
Navy / Light grey / White	2965C / 416C / White
Orange / Light grey / White	1505C / 416C / White
Red / Light grey / White	186C / 416C / White

DESCRIPTION

Français :	Polo baseball enfant
English :	Polo baseball kids
Nederlands :	Baseball polo kids
Deutsch :	Kinder Baseball Polohemd
Español :	Polo baseball para ninos
Italiano :	Polo baseball bambino
Português :	Polo baseball de criança

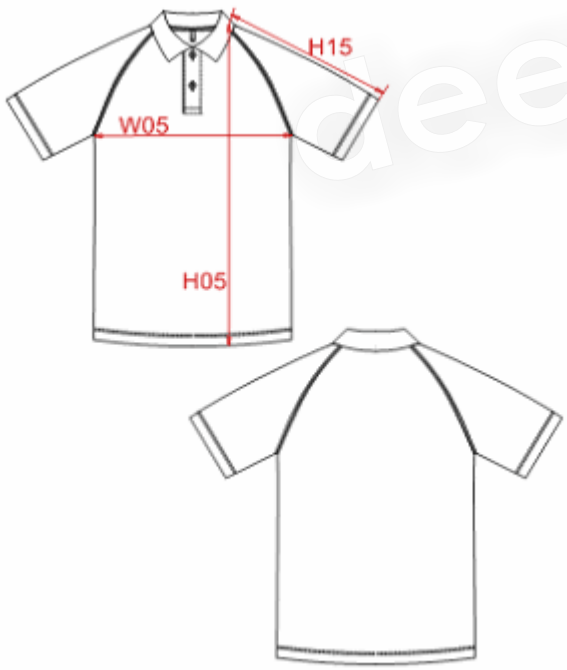

MEASUREMENT

Description	6/8	8/10	10/12	12/14			
H05 Hauteur totale/total height	52	54,45	56,90	59,35			
W05 1/2 largeur poitrine/1/2 chest width	38	41	44	47			
H15 Longueur dessus de manche + épaule / sleeve length + shoulder	25,50	28,50	31,50	34,50			

PACKING

Box	25 pcs / box 6/8-8/10 => L:42cm W:32cm H:16cm GW:5.5kg NW:4.5kg 10/12-12/14 => L:50cm W:33cm H:16cm GW:6.5kg NW:5 kg

CARE LABEL

deeter.de

KARIBAN

REFERENCE : K232

NAME : FLAG

SIZES : S_M_L_XL_XXL_3XL

COMPOSITION :

Main fabric : Polycotton pique 65/35 - 220 65%polyester / 35%cotton
Main fabric : Polycotton pique 65/35 - 220 For contrasted yokes 65%polyester / 35%cotton

WEIGHT :

Main fabric : 220 gsm
Main fabric : 220 gsm

COLORS	PANTONE SERIGRAPHIE
White / Red	White / 186C
Navy / White	2965C / White
White / Royal blue	White / 287C
Red / Black	186C / Black
Black / Lime	Black / 374C
Red / Yellow	186C / 123C
Navy / Sky blue	2965C / 277C
Black / Slate grey	Black / 425C
Black / Orange	Black / 1505C
Navy / Pink	2965C / 1905C
Light grey / Red	422C / 186C
Dark grey / Orange	432C / 1505C

DESCRIPTION

Français :	Polo bicolore
English :	Bi-colour short sleeve polo shirt
Nederlands :	Tweekleurige polo
Deutsch :	Zweifarbiges polohemd
Español :	Polo piqué bicolor
Italiano :	Polo bicolore
Português :	Polo pique bicolor

deetex.de

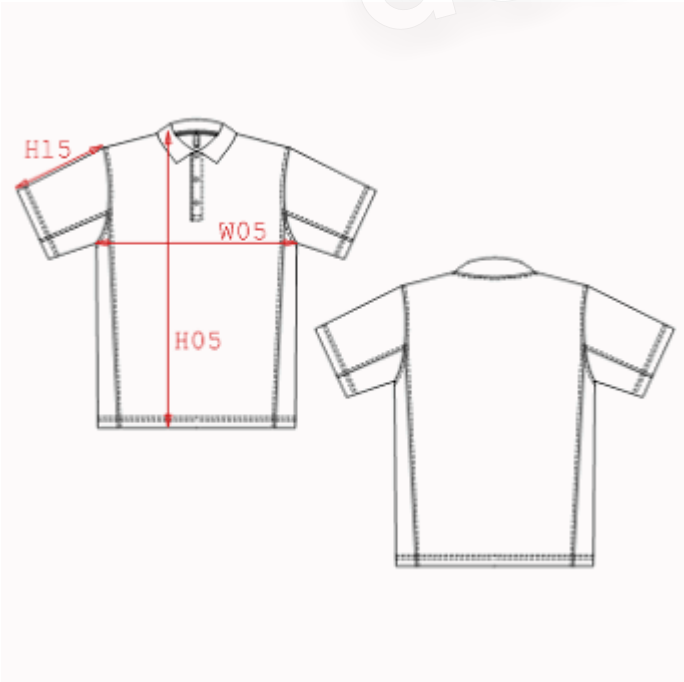

MEASUREMENT

Description	S	M	L	XL	XXL	3XL	
H05 Hauteur totale/total height	68,50	70,50	72,50	74,50	76,50	79,25	
W05 1/2 largeur poitrine/1/2 chest width	49	52	55	58	61	65	
H15 Longueur dessus de manche / sleeve length	21	22	23	24	25	26,25	

PACKING

Box	25 pcs / box S-M => L:54cm W:37cm H:17cm GW:9.40kg NW:7.60kg L-XL => L:58cm W:38cm H:17cm GW:10.40kg NW:8.60kg XXL-3XL => L:60cm W:40cm H:18cm GW:11.20kg NW:9.40kg

CARE LABEL

KARIBAN

REFERENCE : K235

NAME : WILL

SIZES : S_M_L_XL_XXL_3XL

COLORS	PANTONE SERIGRAPHIE
White	White
Black	Black

COMPOSITION :

Main fabric : Cotton / Elastane Pique 220 95%cotton / 5%elastane

WEIGHT :

Main fabric : 220 gsm

FABRIC CONSTRUCTION AND FINISHING :

Pique

DESCRIPTION

Français :	Polo homme manches courtes
English :	Short sleeve polo
Nederlands :	Mannenpolo met korte mouwen
Deutsch :	Herren kurzarm-polohemd
Español :	Polo de manga corta
Italiano :	Polo uomo maniche corte
Português :	Polo de manga curta

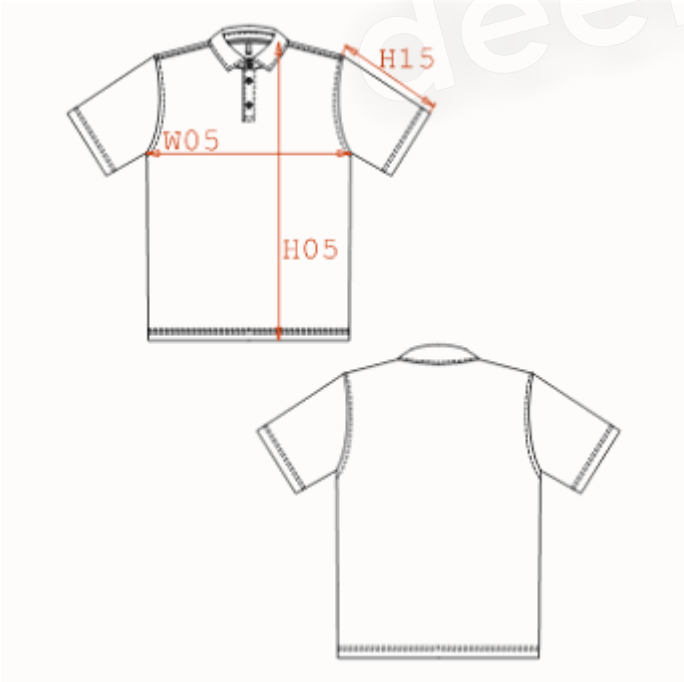

MEASUREMENT

Description	S	M	L	XL	XXL	3XL	
H05 Hauteur totale / Total height	71,50	73,50	75,50	77,50	80,25	83	
W05 1/2 largeur poitrine/1/2 chest width	48	51	54	57	61	65	
H15 longueur manche / Sleeve length	21,40	22,40	23,40	24,40	25,60	26,80	

PACKING

Box	25 pcs / box S => L:55cm W:40cm H:17cm GW:9.00kg NW:7.50kg M => L:55cm W:40cm H:17cm GW:9.00kg NW:7.50kg L => L:55cm W:40cm H:17cm GW:9.00kg NW:7.50kg XL => L:58cm W:40cm H:17cm GW:10.00kg NW:8.50kg XXL => L:58cm W:40cm H:17cm GW:10.00kg NW:8.50kg 3XL => L:58cm W:40cm H:17cm GW:10.00kg NW:8.50kg

CARE LABEL

deetex.de

KARIBAN

REFERENCE : K236

NAME : KIM

SIZES : XS_S_M_L_XL_XXL

COMPOSITION :

Main fabric : Cotton / Elastane Pique 220 95%cotton / 5%elastane

COLORS	PANTONE SERIGRAPHIE
White	White
Black	Black

WEIGHT :

Main fabric : 220 gsm

FABRIC CONSTRUCTION AND FINISHING :

Pique

DESCRIPTION

Français :	Polo femme manches courtes
English :	Short sleeve polo
Nederlands :	Damespolo met korte mouwen
Deutsch :	Damen kurzarm-polohemd
Español :	Polo de manga corta para mujer
Italiano :	Polo donna maniche corte
Português :	Polo pique de senhora manga curta

deetex.de

MEASUREMENT

Description	XS	S	M	L	XL	XXL	
H05 Hauteur totale/total height	58,40	59,85	61,35	62,85	65,10	67,35	
W05 1/2 largeur poitrine/1/2 chest width	42	44	46	48	51	54	
H15 longueur manche / Sleeve length	9,80	10,80	11,80	12,80	14,05	15,30	

PACKING

Box	25 pcs / box XS => L:44cm W:33cm H:17cm GW:6.40kg NW:5.00kg S => L:44cm W:33cm H:17cm GW:6.400kg NW:5.00kg M => L:44cm W:33cm H:17cm GW:6.40kg NW:5.00kg L => L:44cm W:33cm H:17cm GW:6.40kg NW:5.00kg XL => L:47cm W:33cm H:17cm GW:7.10kg NW:5.60kg XXL => L:47cm W:33cm H:17cm GW:7.10kg NW:5.60kg

CARE LABEL

KARIBAN

REFERENCE : K237

NAME : RAY

SIZES : M_L_XL_XXL

COMPOSITION :

Main fabric : Jersey 210 100%cotton
Main fabric : Jersey 210 For contrasted stipes 100%cotton

WEIGHT :

Main fabric : 210 gsm
Main fabric : 210 gsm

COLORS	PANTONE SERIGRAPHIE
Red / White	186C / White
Orange / White	1505C / White
Sky blue / White	277C / White
Navy / White	2965C / White
Light green / White	359C / White

DESCRIPTION

Français :	Polo rayé bicolore manches courtes
English :	Sewn stripe bi-colour polo shirt
Nederlands :	Tweekleurige gesteepte polo met korte mouwen
Deutsch :	Zweifarbiges kurzarm streifen-polohemd
Español :	Polo bicolor de manga corta a rayas
Italiano :	Polo rigato bicolore maniche corte
Português :	Polo bicolor manga curta

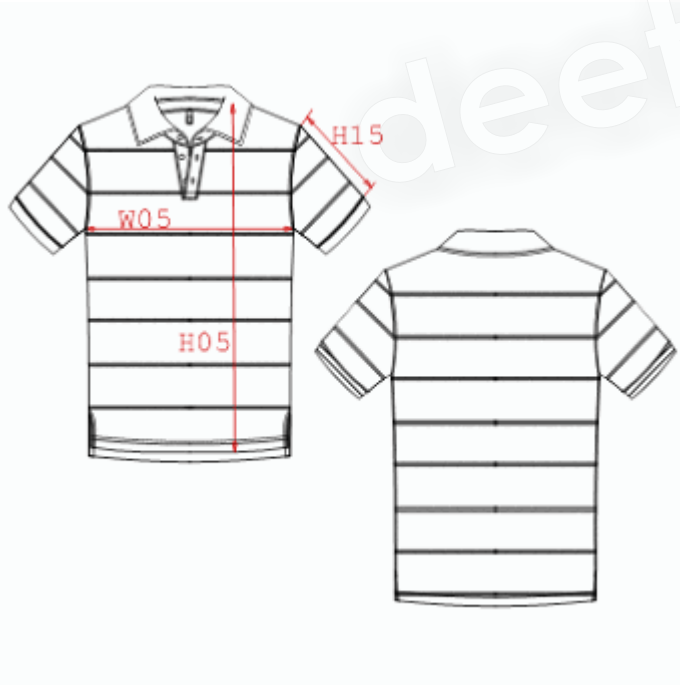

MEASUREMENT

Description	M	L	XL	2XL			
H05 Hauteur totale devant / Front total height	70	72	74,75	77,50			
W05 1/2 largeur poitrine / 1/2 chest width	51	54	58	62			
H15 Longueur manche / Sleeve length	20	21	22,25	23,50			

PACKING

Box	20 pcs / box M => L:60cm W:42cm H:13cm GW:7.20kg NW:5.80kg L => L:60cm W:42cm H:13cm GW:7.20kg NW:5.80kg XL => L:60cm W:42cm H:13cm GW:7.20kg NW:5.80kg XXL => L:60cm W:42cm H:13cm GW:7.20kg NW:5.80kg

CARE LABEL

deeter.de

KARIBAN

REFERENCE : K238

NAME : LADIES POLO JERSEY

SIZES : XS_S_M_L_XL_XXL

COMPOSITION :
Main fabric : Combed cotton jersey 180 100%cotton

WEIGHT :
Main fabric : 180 gsm

FABRIC CONSTRUCTION AND FINISHING :
Combed jersey

COLORS	PANTONE SERIGRAPHIE
White	White
Black	Black
Capuccino	412C
Pink	706C
Red	186C
Sky blue	277C
Navy	2965C

DESCRIPTION

Français :	Polo femme manches courtes
English :	Ladies short sleeve jersey polo
Nederlands :	Damespolo met korte mouwen
Deutsch :	Kurzarm Polohemd für Damen
Español :	Polo de manga corta para mujer
Italiano :	Polo donna maniche corte
Português :	Polo jersey de senhora

MEASUREMENT

Description	XS	S	M	L	XL	XXL	
H05 Hauteur totale / Total height	60,35	61,85	63,35	64,85	67,10	69,35	
W05 1/2 largeur poitrine/1/2 chest width	43	45	47	49	52	55	
H15 longueur manche / Sleeve length	11,10	11,60	12,10	12,60	13,35	14,10	

PACKING

Box	25 pcs / box XS => L:44cm W:34cm H:15cm GW:6.50kg NW:5.50kg S => L:44cm W:34cm H:15cm GW:7.00kg NW:6.00kg M => L:44cm W:34cm H:15cm GW:7.50kg NW:6.50kg L => L:49cm W:36cm H:16cm GW:7.00kg NW:8.00kg XL => L:49cm W:36cm H:16cm GW:9.00kg NW:8.50kg XXL => L:52cm W:38cm H:17cm GW:9.50kg NW:9.00kg

CARE LABEL

deetex.de

KARIBAN

REFERENCE : K239

NAME : MIKE

SIZES : S_M_L_XL_XXL_3XL

COMPOSITION :
Main fabric : Cotton / Elastane Pique 220 95%cotton / 5%elastane

WEIGHT :
Main fabric : 220 gsm

FABRIC CONSTRUCTION AND FINISHING :
Pique cotton

COLORS	PANTONE SERIGRAPHIE
White	White
Black	Black
Navy	2965C
Red	186C
Dark grey	432C
Chocolate	4975C
Sky blue	277C

DESCRIPTION

Français :	Polo homme manches courtes
English :	Short sleeve polo shirt
Nederlands :	Heren polo met korte mouwen
Deutsch :	Herren Kurzarm Polohemd
Español :	Polo de manga corta
Italiano :	Polo uomo maniche corte
Português :	Polo de manga curta

MEASUREMENT

Description	S	M	L	XL	XXL	3XL	
H05 Hauteur totale/total height	71,50	73,50	75,50	77,50	80,25	83	
W05 1/2 largeur poitrine/1/2 chest width	48	51	54	57	61	65	
H15 Longueur dessus de manche / sleeve length	18,85	19,85	20,80	21,80	23,05	24,40	

PACKING

Box	25 pcs / box S => L:55cm W:40cm H:17cm GW:9.50kg NW:8.00kg M => L:55cm W:40cm H:17cm GW:9.50kg NW:8.00kg L => L:55cm W:40cm H:17cm GW:10.00kg NW:8.50kg XL => L:58cm W:40cm H:17cm GW:10.50kg NW:9.00kg XXL => L:58cm W:40cm H:17cm GW:10.50kg NW:9.00kg 3XL => L:58cm W:40cm H:17cm GW:11.50kg NW:10.00kg

CARE LABEL

deetex.de

KARIBAN

REFERENCE : K240

NAME : BROOKE

SIZES : XS_S_M_L_XL_XXL

COMPOSITION :
Main fabric : Cotton / Elastane Pique 220 95%cotton / 5%elastane

WEIGHT :
Main fabric : 220 gsm

FABRIC CONSTRUCTION AND FINISHING :
Pique cotton

COLORS	PANTONE SERIGRAPHIE
White	White
Black	Black
Navy	2965C
Red	186C
Dark grey	432C
Chocolate	4975C
Sky blue	277C

DESCRIPTION

Français :	Polo femme manches courtes
English :	Ladies short sleeve polo shirt
Nederlands :	Dames polo met korte mouwen
Deutsch :	Damen Kurzarm Polohemd
Español :	Polo de manga corta para mujer
Italiano :	Polo donna maniche corte
Português :	Polo de manga curta

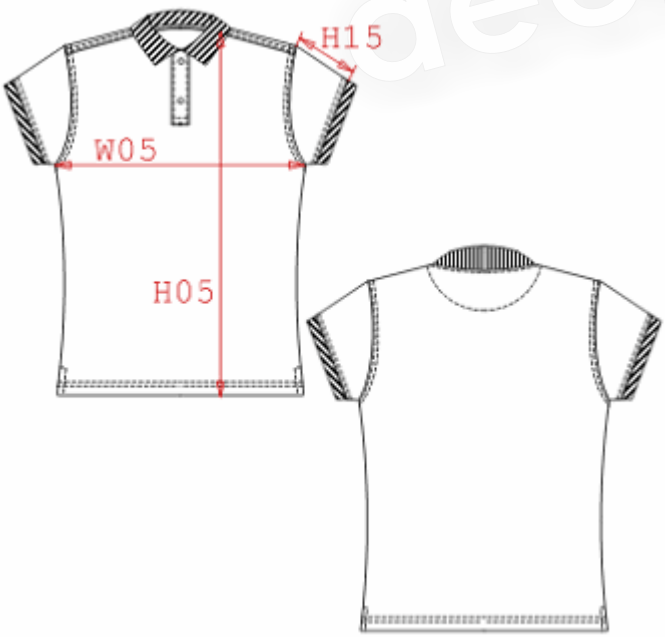

MEASUREMENT

Description	XS	S	M	L	XL	XXL	
H05 Hauteur totale/total height	58,35	59,85	61,35	62,85	65,10	67,35	
W05 1/2 largeur poitrine/1/2 chest width	42	44	46	48	51	54	
H15 Longueur dessus de manche / sleeve length	9,75	10,10	10,45	10,80	11,35	11,85	

PACKING

Box	25 pcs / box XS => L:44cm W:33cm H:17cm GW:7.00kg NW:5.50kg S => L:44cm W:33cm H:17cm GW:7.00kg NW:5.50kg M => L:44cm W:33cm H:17cm GW:7.00kg NW:5.50kg L => L:47cm W:33cm H:17cm GW:7.50kg NW:6.00kg XL => L:47cm W:33cm H:17cm GW:8.00kg NW:6.50kg XXL => L:47cm W:33cm H:17cm GW:8.00kg NW:6.50kg

CARE LABEL

deetex.de

KARIBAN

REFERENCE : K241

NAME :

SIZES : S_M_L_XL_XXL_3XL_4XL

COMPOSITION :

Main fabric : Good carded cotton pique 210 For white color 100%cotton
Main fabric : Good carded cotton pique 220 100%cotton

WEIGHT :

Main fabric : 210 gsm
Main fabric : 220 gsm

COLORS	PANTONE SERIGRAPHIE
White	White
Black	Black
Navy	2965C
Red	186C
Dark grey	432C
Dark khaki	418C
Sky blue	7695C
Orange	1585C
Yellow	123C
Light royal blue	2935C

DESCRIPTION

Français :	Polo homme manches courtes
English :	Men's short sleeve pique polo shirt
Nederlands :	Heren polo met korte mouwen
Deutsch :	Herren kurzarm polohemd pique
Español :	Polo de manga corta
Italiano :	Polo pique' uomo maniche corte
Português :	Polo pique manga curta

CARE LABEL

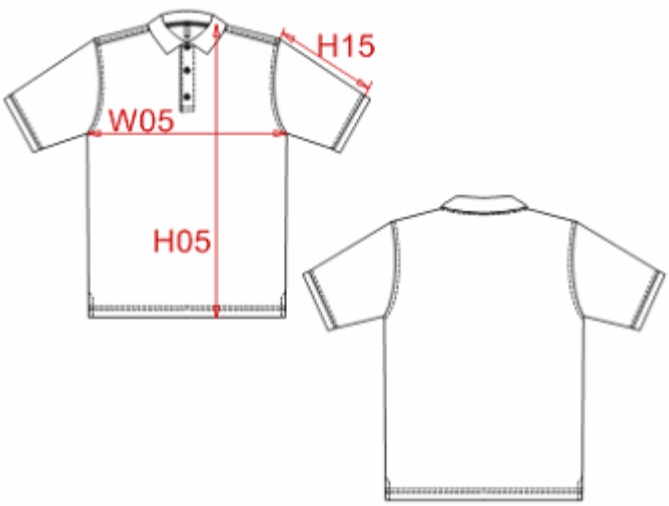

MEASUREMENT

Description	S	M	L	XL	XXL	3XL	4XL
H05 Hauteur totale / Total height	72,50	74,50	76,50	78,50	80,50	83,25	86
W05 1/2 largeur poitrine / 1/2 chest width	50	53	56	59	62	66	70
H15 Longueur manche / Sleeve length	18	19	20	21	22	23,20	24,40

PACKING

Box	25 pcs / box S => L:54cm W:39cm H:20cm GW:7.00kg NW:5.50kg M => L:54cm W:39cm H:20cm GW:7.40kg NW:5.90kg L => L:58cm W:41cm H:20cm GW:7.90kg NW:6.30kg XL => L:59cm W:41cm H:20cm GW:8.30kg NW:6.70kg XXL => L:62cm W:43cm H:20cm GW:8.80kg NW:7.10kg 3XL => L:70cm W:45cm H:20cm GW:9.30kg NW:7.50kg 4XL => L:70cm W:45cm H:20cm GW:9.70kg NW:7.90kg

textex.de

KARIBAN

REFERENCE : K242

NAME :

SIZES : S_M_L_XL_XXL_3XL

COMPOSITION :

Main fabric : Good carded cotton pique 210 For white color 100%cotton
Main fabric : Good carded cotton pique 220 100%cotton

WEIGHT :

Main fabric : 210 gsm
Main fabric : 220 gsm

FABRIC CONSTRUCTION AND FINISHING :

Enzyme wash

COLORS	PANTONE SERIGRAPHIE
White	White
Black	Black
Navy	2965C
Red	186C
Dark grey	432C
Dark khaki	418C
Sky blue	7695C
Orange	1585C
Yellow	123C
Light royal blue	2935C

DESCRIPTION

Français :	Polo femme manches courtes
English :	Ladies short sleeve pique polo shirt
Nederlands :	Dames polo met korte mouwen
Deutsch :	Damen kurzarm polohemd pique
Español :	Polo de manga corta para mujer
Italiano :	Polo pique' donna maniche corte
Português :	Polo de senhora manga curta

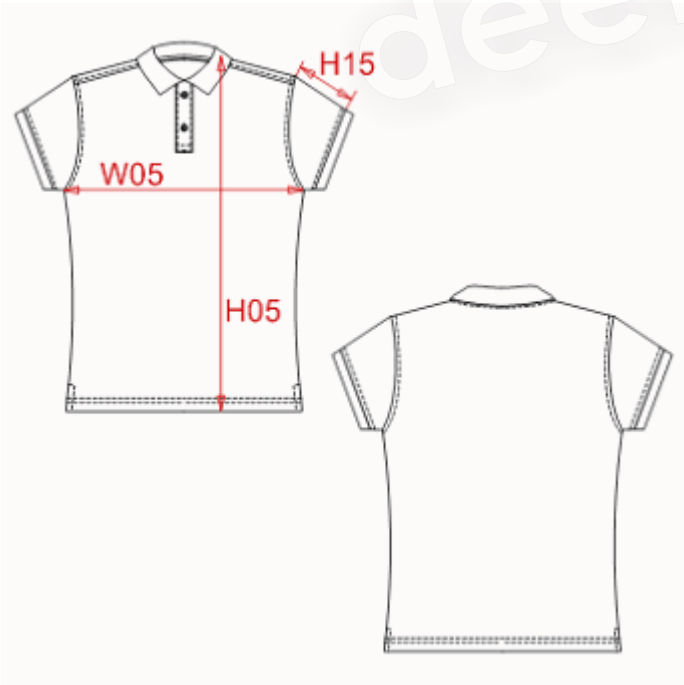

MEASUREMENT

Description	S	M	L	XL	XXL	3XL	
H05 Hauteur totale / Total height	62	63,50	65	66,50	68,75	71	
W05 1/2 largeur poitrine / 1/2 chest width	46	48	50	52	55	58	
H15 Longueur manche / Sleeve length	10,65	11	11,35	11,70	12,25	12,75	

PACKING

Box	25 pcs / box S => L:50cm W:35cm H:18cm GW:5.50kg NW:4.10kg M => L:50cm W:35cm H:18cm GW:5.90kg NW:4.50kg L => L:52cm W:37cm H:18cm GW:6.40kg NW:4.90kg XL => L:52cm W:37cm H:18cm GW:6.80kg NW:5.30kg XXL => L:55cm W:39cm H:18cm GW:7.30kg NW:5.70kg 3XL => L:58cm W:40cm H:18cm GW:7.80kg NW:6.10kg

CARE LABEL

deetex.de

KARIBAN

REFERENCE : K243

NAME :

SIZES : S_M_L_XL_XXL_3XL_4XL

COMPOSITION :

Main fabric : Good carded cotton pique 220 100%cotton

COLORS	PANTONE SERIGRAPHIE
Black	Black
Navy	2965C
Red	186C
Dark grey	432C

WEIGHT :

Main fabric : 220 gsm

DESCRIPTION

Français :	Polo homme manches longues
English :	Men's long sleeve pique polo shirt
Nederlands :	Heren polo met lange mouwen
Deutsch :	Herren langarm polohemd pique
Español :	Polo de manga larga
Italiano :	Polo pique' uomo maniche lunghe
Português :	Polo de manga comprida

MEASUREMENT

Description	S	M	L	XL	2XL	3XL	4XL
H05 Hauteur totale / Total height	72,50	74,50	76,50	78,50	80,50	83,25	86
W05 1/2 largeur poitrine / 1/2 chest width	50	53	56	59	62	66	70
H15 Longueur manche sans poignet / Sleeve length without cuff	59	61	63	65	67	69,20	71,40

PACKING

Box	25 pcs / box S => L:54cm W:39cm H:24cm GW:7.90kg NW:6.50kg M => L:54cm W:39cm H:24cm GW:8.40kg NW:7.00kg L => L:60cm W:41cm H:24cm GW:9.00kg NW:7.50kg XL => L:60cm W:41cm H:24cm GW:9.50kg NW:8.00kg XXL => L:64cm W:42cm H:24cm GW:10.10kg NW:8.50kg 3XL => L:70cm W:45cm H:24cm GW:10.70kg NW:9.00kg 4XL => L:70cm W:45cm H:24cm GW:11.20kg NW:9.50kg

CARE LABEL

deeter.de

KARIBAN

REFERENCE : K244

NAME :

SIZES : S_M_L_XL_XXL_3XL

COMPOSITION :

Main fabric : Good carded cotton pique 220 100%cotton

COLORS	PANTONE SERIGRAPHIE
Black	Black
Navy	2965C
Red	186C
Dark grey	432C

WEIGHT :

Main fabric : 220 gsm

FABRIC CONSTRUCTION AND FINISHING :

Enzyme wash

DESCRIPTION

Français :	Polo femme manches longues
English :	Ladies long sleeve pique polo shirt
Nederlands :	Dames polo met lange mouwen
Deutsch :	Damen langarm polohemd pique
Español :	Polo de manga larga para mujer
Italiano :	Polo pique' donna maniche lunghe
Português :	Polo de senhora manga comprida

deetex.de

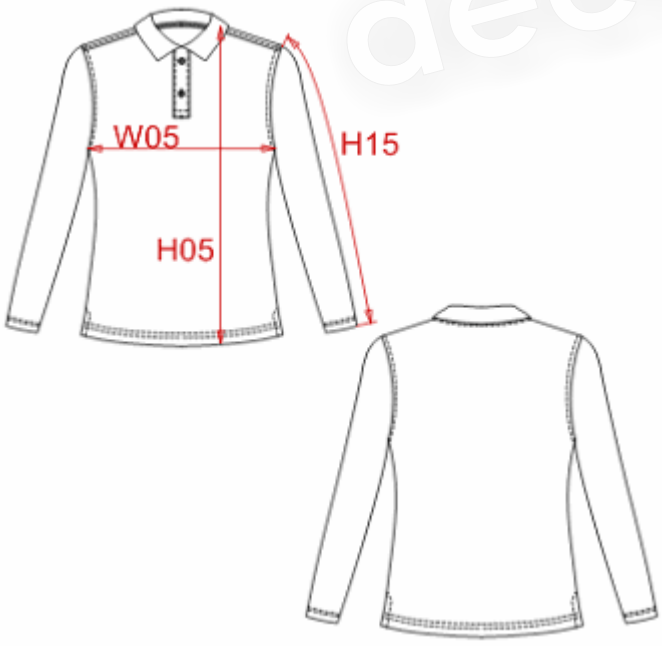

MEASUREMENT

Description	S	M	L	XL	2XL	3XL	
H05 Hauteur totale / Total height	63	64,50	66	67,50	69,75	72	
W05 1/2 largeur poitrine / 1/2 chest width	46	48	50	52	55	58	
H15 Longueur manche / Sleeve length	60	61	62	63	64	65	

PACKING

Box	25 pcs / box S => L:50cm W:35cm H:24cm GW:6.50kg NW:5.10kg M => L:50cm W:35cm H:24cm GW:6.90kg NW:5.50kg L => L:52cm W:37cm H:24cm GW:7.40kg NW:5.90kg XL => L:52cm W:37cm H:24cm GW:7.80kg NW:6.30kg XXL => L:54cm W:38cm H:24cm GW:8.30kg NW:6.70kg 3XL => L:58cm W:40cm H:24cm GW:8.80kg NW:7.10kg

CARE LABEL

KARIBAN

REFERENCE : K311

NAME : ANGELINA

SIZES : S_M_L_XL

COMPOSITION :
Main fabric : Rib 1x1 Cotton - 220 100%cotton

WEIGHT :
Main fabric : 220 gsm

COLORS	PANTONE SERIGRAPHIE
White	White
Black	Black
Light grey	Warm gray 5C
Deep orange	021C
Navy	2965C
Red	186C
Khaki	5743C
Fuschia	218C
Chocolate	439C
Lime	367C
Deep turquoise	3125C
True Yellow	109C
Plum	5185C
Pale pink	705C

DESCRIPTION

Français :	Débardeur femme
English :	Ladies tank vest
Nederlands :	Damensonderhemd-(slip_over)
Deutsch :	Damen top
Español :	T-shirt sin mangas para mujer
Italiano :	Canottiera per donna
Português :	Top de senhora Angelina

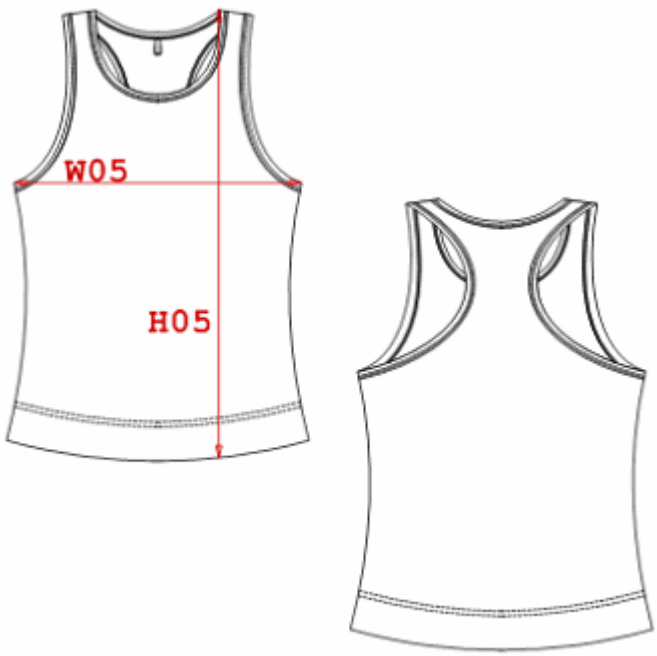

MEASUREMENT

Description	S	M	L	XL			
W05 1/2 largeur poitrine / 1/2 chest width	35	37	39	41			
H05 Hauteur totale / Total height	55,75	57,75	59,75	61,75			

PACKING

Box	100 pcs / box S => L:62cm W:40cm H:21cm GW:11.00kg NW:9.60kg M => L:62cm W:40cm H:21cm GW:12.00kg NW:10.60kg L => L:62cm W:40cm H:21cm GW:12.20kg NW:10.80kg XL => L:62cm W:40cm H:21cm GW:13.00kg NW:11.60kg

CARE LABEL

leetex.de

KARIBAN

REFERENCE : K312

NAME : MACHA

SIZES : S_M_L_XL

COMPOSITION :
Main fabric : Rib 1x1 Cotton - 220 100%cotton

WEIGHT :
Main fabric : 220 gsm

COLORS	PANTONE SERIGRAPHIE
White	White
Black	Black
Light grey	Warm gray 5C
Deep orange	021C
Navy	2965C

DESCRIPTION	
Français :	T-shirt femme encolure ronde
English :	Ladies round neck T-shirt
Nederlands :	Dames T-shirt met ronde kraag
Deutsch :	Damen rundhals T-shirt
Español :	Camiseta escorte redondo para mujer
Italiano :	T-shirt donna scollo rotondo
Português :	T-shirt de senhora decote redondo

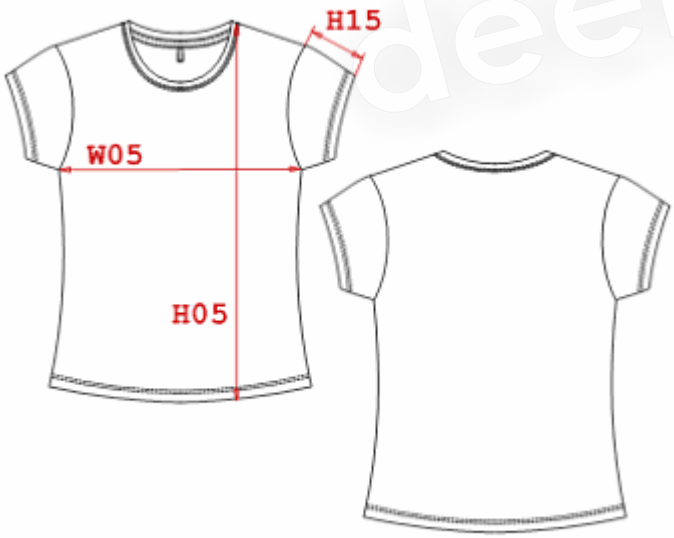

MEASUREMENT

Description	S	M	L	XL			
W05 1/2 largeur poitrine / 1/2 chest width	36	38	40	42			
H05 Hauteur totale / Total height	55,50	57,50	59,50	61,50			
H15 Longueur manche / Sleeve length	9	10	11	12			

PACKING

Box	100 pcs / box S => L:60cm W:40cm H:26cm GW:11.50kg NW:10.00kg M => L:60cm W:40cm H:26cm GW:14.00kg NW:12.50kg L => L:60cm W:40cm H:26cm GW:14.60kg NW:13.00kg XL => L:60cm W:40cm H:26cm GW:14.80kg NW:13.50kg

CARE LABEL

deeter.de

KARIBAN

REFERENCE : K317

NAME : LISA

SIZES : S_M_L_XL

COLORS	PANTONE SERIGRAPHIE
Black	Black
White	White
Lavender	278C
Heather grey	Cool gray 6C

COMPOSITION :

Main fabric : Rib 2x2 Cotton - 220 100%cotton
Fabric 1 : Good carded cotton single jersey 165 For armholes and neckline finishing 100%cotton
Fabric 2 : Rib 2x2 Cotton/Viscose - 220 For heather grey color only 90%cotton / 10%viscose
Fabric 3 : Good carded Cotton/Viscose single jersey 165 For heather grey color only
For armholes and neckline finishing 90%cotton /

WEIGHT :

Main fabric : 220 gsm
Fabric 1 : 165 gsm
Fabric 2 : 220 gsm
Fabric 3 : 165 gsm

DESCRIPTION

Français :	Débardeur femme
English :	Ladies ribbed vest
Nederlands :	Vrouwen débardeur
Deutsch :	Damen Top Ärmellos
Español :	Camiseta de tirantes para mujer
Italiano :	Canottira donna
Português :	Top de senhora Lisa

deetex.de

MEASUREMENT

Description	S	M	L	XL			
W05 1/2 largeur poitrine/1/2 chest width	30	32	34	37			
H05 hauteur totale/total height	53,50	55,50	57,50	59,50			

PACKING

Box	100 pcs / box S => L:60cm W:37cm H:20cm GW:9.80kg NW:8.00kg M => L:60cm W:37cm H:20cm GW:10.40kg NW:8.80kg L => L:62cm W:40cm H:22cm GW:10.80kg NW:9.00kg XL => L:62cm W:40cm H:22cm GW:11.60kg NW:9.80kg

CARE LABEL

KARIBAN SARL au capital de 100 000 € 13 Avenue du Girou ZAC Eurocentre 31620 Villeneuve Les Bouloc Tél : 00 33 (0)5 61 00 62 00 Fax: 00 33 (0)5 53 84 68 43

KARIBAN

REFERENCE : K324

NAME : BAMBOO

SIZES : S_M_L_XL

COLORS	PANTONE SERIGRAPHIE
White	White
Black	Black

COMPOSITION :

Main fabric : Viscose bamboo / Elastane 220 96%viscose bamboo / 4%elastane

WEIGHT :

Main fabric : 220 gsm

DESCRIPTION	
Français :	T-shirt femme encolure ronde
English :	Ladies round neck T-shirt
Nederlands :	Dames T-shirt met ronde hals
Deutsch :	Damen rundhals-shirt
Español :	Camiseta escote redondo para mujer
Italiano :	T-shirt donna scollo rotondo
Português :	T-shirt decote redondo

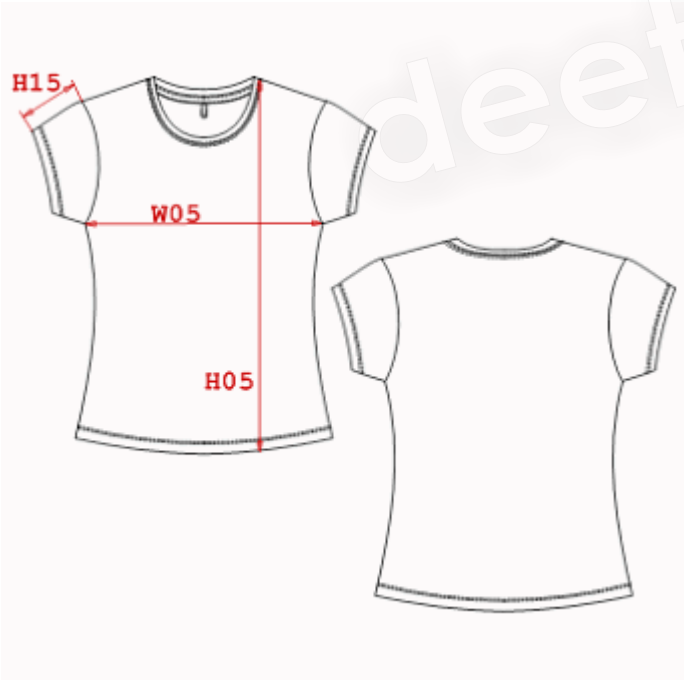

MEASUREMENT

Description	S	M	L	XL			
H05 Hauteur totale / Total height	56,15	57,65	59,15	61,45			
W05 1/2 largeur poitrine / 1/2 chest width	37	39	41	44			
H15 Longueur manche / Sleeve length	9,95	10,95	11,95	13,25			

PACKING

Box	50 pcs / box S => L:49cm W:30cm H:19cm GW:6.40kg NW:5.60kg M => L:49cm W:30cm H:19cm GW:6.40kg NW:5.60kg L => L:49cm W:30cm H:19cm GW:6.40kg NW:5.60kg XL => L:49cm W:30cm H:19cm GW:6.40kg NW:5.60kg

CARE LABEL

deetex.de

KARIBAN

REFERENCE : K325

NAME : ANAIS

SIZES : S_M_L

COLORS	PANTONE SERIGRAPHIE
Black / Corde	Black / 7529C
Chocolate / Corde	476C / 7529C

COMPOSITION :

Neckline fabric : Rib 1x1 Cotton - 200 For body and sleeve 100%cotton
Lining 1 : Jersey 120 For inside hood 100%cotton

WEIGHT :

Neckline fabric : 200 gsm
Lining 1 : 120 gsm

FABRIC CONSTRUCTION AND FINISHING :

Cotton 1x1 rib 30's

DESCRIPTION

Français :	Tunique femme à capuche
English :	Ladies hooded tunic
Nederlands :	Damestuniek met kap
Deutsch :	Damen-tunika mit kapuze
Español :	Tùnica con capucha para mujer
Italiano :	Tunica donna con cappuccio
Português :	Túnica com capuz

MEASUREMENT

Description	S	M	L				
W05 1/2 largeur poitrine / 1/2 chest width	41	43	46				
H05 Hauteur totale devant / Front total height	77,75	79,75	82,05				
H15 Longueur dessus de manche sans bord côte / Sleeve length without rib	24,95	25,95	27,20				

PACKING

Box	20 pcs / box S => L:60cm W:35cm H:25cm GW:7.90kg NW:6.00kg M => L:60cm W:35cm H:25cm GW:7.90kg NW:6.00kg L => L:60cm W:35cm H:25cm GW:7.90kg NW:6.00kg

CARE LABEL

deetex.de

KARIBAN

REFERENCE : K326

NAME : MAÏA

SIZES : S_M_L_XL_XXL

COMPOSITION :

Main fabric : Cotton / Elastane 190 95%cotton / 5%elastane

WEIGHT :

Main fabric : 190 gsm

COLORS	PANTONE SERIGRAPHIE
White	White
Black	Black
Navy	2965C
Dark grey	432C
Red	186C
Sky blue	277C

DESCRIPTION

Français :	T-shirt femme manches courtes encolure ronde
English :	Ladies short sleeve round neck T-shirt
Nederlands :	Dames T-shirt met ronde hals en korte mouwen
Deutsch :	Damen rundhals T-shirt
Español :	Camiseta de manga corta y escote redondo para mujer
Italiano :	T-shirt donna maniche corte scollo tondo
Português :	T-shirt de senhora decote redondo

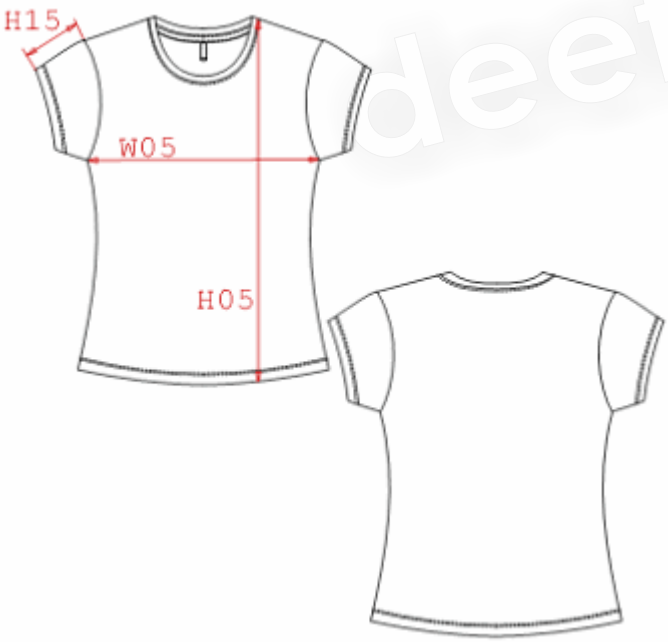

MEASUREMENT

Description	S	M	L	XL	XXL		
W05 1/2 largeur poitrine / 1/2 chest width	41	43	45	48	51		
H05 Hauteur totale / Total height	58	59,50	61	63,25	65,50		
H15 Longueur manche / Sleeve length	13,50	14	14,50	15,25	16		

PACKING

Box	50 pcs / box S => L:45cm W:34cm H:23cm GW:7.00kg NW:5.50kg M => L:45cm W:34cm H:23cm GW:7.50kg NW:6.00kg L => L:49cm W:34cm H:23cm GW:7.80kg NW:6.30kg XL => L:49cm W:34cm H:23cm GW:8.20kg NW:6.70kg XXL => L:49cm W:34cm H:23cm GW:8.80kg NW:7.30kg

CARE LABEL

deeter.de

KARIBAN

REFERENCE : K327

NAME : ELECTRA

SIZES : S_M_L_XL_XXL

COMPOSITION :

Main fabric : Cotton / Elastane 190 95%cotton / 5%elastane

WEIGHT :

Main fabric : 190 gsm

COLORS	PANTONE SERIGRAPHIE
White	White
Black	Black
Navy	2965C
Dark grey	432C
Red	186C
Sky blue	277C

DESCRIPTION

Français :	T-shirt femme manches courtes encolure V
English :	Ladies short sleeve V-neck T-shirt
Nederlands :	Dames T-shirt met V-hals en korte mouwen
Deutsch :	Damen T-shirt mit V-auschnitt
Español :	Camiseta de manga corta y escote de pico para mujer
Italiano :	T-shirt donna maniche corte scollo a V
Português :	T-shirt de senhora decote V

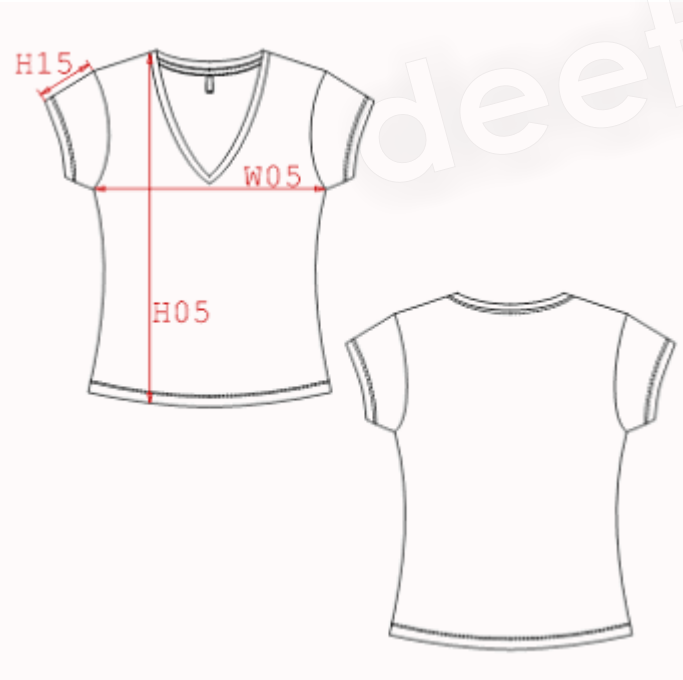

MEASUREMENT

Description	S	M	L	XL	XXL		
W05 1/2 largeur poitrine / 1/2 chest width	41	43	45	48	51		
H05 Hauteur totale / Total height	58	59,50	61	63,25	65,50		
H15 Longueur manche / Sleeve length	13,50	14	14,50	15,25	16		

PACKING

Box	50 pcs / box S => L:45cm W:34cm H:23cm GW:7.00kg NW:5.50kg M => L:45cm W:34cm H:23cm GW:7.20kg NW:5.70kg L => L:49cm W:34cm H:23cm GW:7.80kg NW:6.30kg XL => L:49cm W:34cm H:23cm GW:8.20kg NW:6.70kg XXL => L:49cm W:34cm H:23cm GW:9.00kg NW:7.50kg

CARE LABEL

deeteX.de

KARIBAN

REFERENCE : K328

NAME : CARLA

SIZES : S_M_L_XL_XXL

COMPOSITION :

Main fabric : Cotton / Elastane 190 95%cotton / 5%elastane

COLORS	PANTONE SERIGRAPHIE
Black	Black
White	White

WEIGHT :

Main fabric : 190 gsm

DESCRIPTION

Français :	T-shirt femme manches longues encolure ronde
English :	Ladies short sleeve round neck T-shirt
Nederlands :	Dames T-shirt met ronde hals en lange mouwen
Deutsch :	Damen langarm rundhals T-shirt
Español :	Camiseta de manga larga y escote redondo para mujer
Italiano :	T-shirt donna maniche lunghe scollo tondo
Português :	T-shirt de senhora decote redondo e manga comprida

MEASUREMENT

Description	S	M	L	XL	XXL		
W05 1/2 largeur poitrine / 1/2 chest width	41	43	45	48	51		
H05 Hauteur totale / Total height	58	59,50	61	63,25	65,50		
H15 Longueur manche / Sleeve length	57,50	58,50	59,50	61	62,50		

PACKING

Box	25 pcs / box S => L:45cm W:34cm H:16cm GW:5.00kg NW:3.50kg M => L:45cm W:34cm H:16cm GW:5.60kg NW:4.10kg L => L:48cm W:34cm H:16cm GW:6.00kg NW:4.50kg XL => L:48cm W:34cm H:16cm GW:6.20kg NW:4.70kg XXL => L:48cm W:34cm H:16cm GW:6.50kg NW:5.00kg

CARE LABEL

KARIBAN

REFERENCE : K329

NAME :

SIZES : S_M_L_XL_XXL

COMPOSITION :

Main fabric : Cotton / Elastane 190 95%cotton / 5%elastane

COLORS	PANTONE SERIGRAPHIE
Black	Black
White	White

WEIGHT :

Main fabric : 190 gsm

DESCRIPTION

Français :	T-shirt femme manches longues encolure V
English :	Ladies long sleeve V-neck T-shirt
Nederlands :	Dames T-shirt met V-hals en lange mouwen
Deutsch :	Damen langarm T-shirt mit V-ausschnitt
Español :	Camiseta de manga larga y cuello de pico mujer
Italiano :	T-shirt donna maniche lunghe scollo a V
Português :	T-shirt de senhora decote V

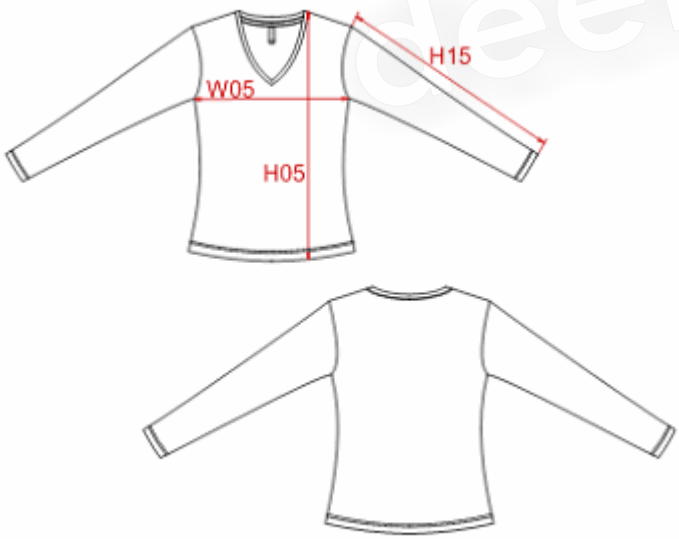

MEASUREMENT

Description	S	M	L	XL	XXL		
H05 Hauteur totale / Total height	58	59,50	61	63,25	65,50		
W05 1/2 largeur poitrine / 1/2 chest width	41	43	45	48	51		
H15 Longueur manche / Sleeve length	57,50	58,50	59,50	61	62,50		

PACKING

Box	50 pcs / box S => L:47cm W:36cm H:23cm GW:7.50kg NW:6.00kg M => L:47cm W:36cm H:23cm GW:8.00kg NW:6.30kg L => L:50cm W:38cm H:23cm GW:8.30kg NW:6.80kg XL => L:50cm W:38cm H:23cm GW:8.70kg NW:7.20kg XXL => L:50cm W:38cm H:23cm GW:9.30kg NW:8.80kg

CARE LABEL

KARIBAN

REFERENCE : K330 **NAME :** BASEBALL

SIZES : S_M_L_XL_XXL_3XL

COMPOSITION :

Main fabric : Jersey 165 For body and inner neckline tape
100%cotton
Main fabric : Jersey 165 For contrasted sleeves
For sleeve 100%cotton

WEIGHT :

Main fabric : 165 gsm
Main fabric : 165 gsm

FABRIC CONSTRUCTION AND FINISHING :

Single jersey

DESCRIPTION	
Français :	Tee-shirt manches courtes
English :	Raglan short sleeves T-shirt
Nederlands :	T-shirt base ball
Deutsch :	Base ball T-Shirtraglan
Español :	T-shirt mangas cortas raglan
Italiano :	Maglietta maniche corte raglan
Português :	T-shirt de homem bicolor

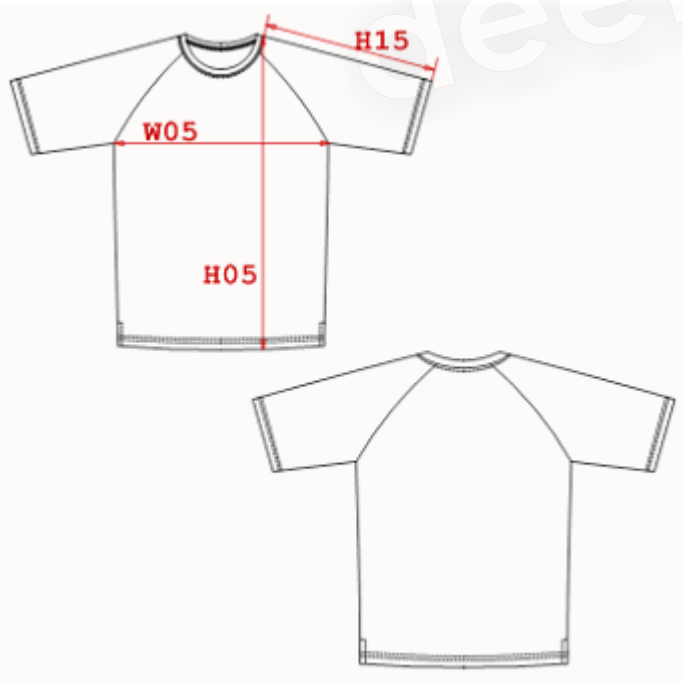

MEASUREMENT

Description	S	M	L	XL	XXL	3XL	
H05 Hauteur totale/Total height	69,55	71,65	73,75	75,85	78,75	81,65	
W05 1/2 poitrine/1/2 chest	50	53	56	59	63	67	
H15 Longueur manche/Sleeve length	37	39	41	43	45,55	48,10	

PACKING

Box	100 pcs / box S=>L:51cm W:36cm H:32cm GW:21.50kg NW:19.50kg M=>L:54cm W:37cm H:32cm GW:21.50kg NW:19.50kg L=>L:57cm W:38cm H:32cm GW:21.50kg NW:19.50kg XL=>L:60cm W:39cm H:33cm GW:21.50kg NW:19.50kg XXL=>L:63cm W:40cm H:33cm GW:21.50kg NW:19.50kg 50 pcs / box 3XL => L:76cm W:41cm H:17cm GW:13.10kg NW:11.50kg

CARE LABEL

KARIBAN

REFERENCE : K330

NAME : BASEBALL

SIZES : S_M_L_XL_XXL_3XL

COMPOSITION :

Main fabric : Jersey 165 100%cotton
Main fabric : Jersey 165 100%cotton

WEIGHT :

Main fabric : 165 gsm
Main fabric : 165 gsm

FABRIC CONSTRUCTION AND FINISHING :

Single jersey

COLORS	PANTONE SERIGRAPHIE
Sand / Green Olive	7502C / 5815C
Ice blue / Denim	551C / 534C
White / Red	White / 186C
White / Navy	White / 2965C
White / Royal blue	White / 287C
White / Forest Green	White / 567C
White / Orange	White / 021C
White / Black	White / Black
Yellow / Black	123C / Black
Orange / Black	021C / Black
Royal blue / Yellow	287C / 123C
Black / Red	Black / 186C
Red / Yellow	186C / 123C
Navy / Orange	2965C / 021C
Orange / Light grey	021C / 422C
Light grey / Red	422C / 186C
Slate grey / Black	425C / Black
Ice blue / Chocolate	551C / 439C
Aqua blue / White	3005C / White
Khaki / Black	5743C / Black
White / Sky blue	White / 277C
Navy / Yellow	2965C / 012C

deetex

KARIBAN

REFERENCE : K340

NAME : TIGER

SIZES : S_M_L_XL_XXL_3XL

COMPOSITION :

Main fabric : Jersey 165 100%cotton
Main fabric : Jersey 165 For contrasted yokes 100%cotton

WEIGHT :

Main fabric : 165 gsm
Main fabric : 165 gsm

COLORS	PANTONE SERIGRAPHIE
Red / White	187C / White
Navy / White	296C / White
Sky blue / White	277C / White
Royal blue / White	287C / White
Orange / White	021C / White
Lime / White	367C / White
Black / White	Black / White
Navy / Pink	296C / 706C
Red / Black	187C / Black
Black / Lime	Black / 367C
Navy / Sky blue	296C / 277C
Black / Orange	Black / 021C
Black / Yellow	Black / 123C
Yellow / Royal blue	123C / 287C

DESCRIPTION

Français :	T-shirt bicolore
English :	Bi coloured T-shirt
Nederlands :	Kontrast T-shirt
Deutsch :	T-shirt
Español :	Camiseta
Italiano :	T-shirt bicolore
Português :	T-shirt bicolor manga curta

deetex.de

CARE LABEL

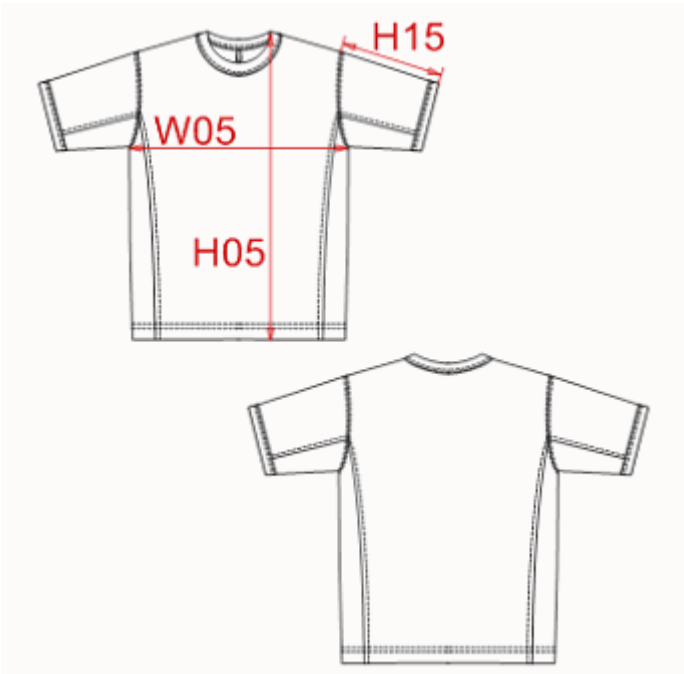

MEASUREMENT

Description	S	M	L	XL	XXL	3XL	
H05 Hauteur totale / Total height	68,50	70,50	72,50	74,50	77,25	80	
W05 1/2 largeur poitrine / 1/2 chest width	49	52	55	58	62	66	
H15 Longueur manche / Sleeve length	22	23	24	25	26	27	

PACKING

Box	100 pcs / box S => L:57cm W:39cm H:39cm GW:19.70kg NW:17.40kg M => L:57cm W:39cm H:39cm GW:20.70kg NW:18.40kg L => L:57cm W:39cm H:39cm GW:22.30kg NW:20.00kg XL => L:61cm W:39cm H:39cm GW:23.60kg NW:21.30kg XXL => L:61cm W:39cm H:39cm GW:24.90kg NW:22.60kg 50 pcs / box 3XL => L:61cm W:39cm H:20cm GW:17.00kg NW:16.00kg

KARIBAN

REFERENCE : K342

NAME : EROS

SIZES : S_M_L_XL_XXL_3XL

COMPOSITION :
Main fabric : Cotton / Elastane 190 95%cotton / 5%elastane

WEIGHT :
Main fabric : 190 gsm

FABRIC CONSTRUCTION AND FINISHING :
Size 3XL only for Black and White

COLORS	PANTONE SERIGRAPHIE
Black	Black
White	White
Chocolate	439C
Navy	2965C
Light grey	Cool gray 5C
Olive	449C
Sky blue	277C
Red	186C
Corde	7502C
Dark grey	432C

DESCRIPTION

Français :	T-shirt homme manches courtes encolure ronde
English :	Short sleeve T-shirt
Nederlands :	Heren T-shirt met ronde hals en korte mouwen
Deutsch :	Kurzarm herren T-shirt
Español :	Camiseta de manga corta y escote redondo
Italiano :	T-shirt uomo maniche corte
Português :	T-shirt manga curta decote redondo

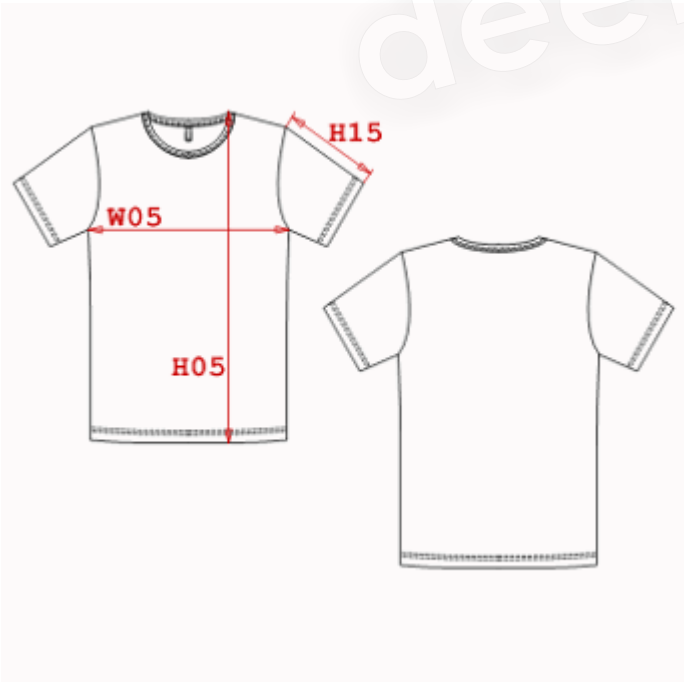

MEASUREMENT

Description	S	M	L	XL	XXL	3XL	
W05 1/2 largeur poitrine / 1/2 chest width	45,75	48,75	51,75	54,75	58,75	62,75	
H05 Hauteur totale / Total height	67	69	71	73	75,75	78,50	
H15 Longueur manche / Sleeve length	18	19	20	21	22,20	23,40	

PACKING

Box	50 pcs / box S => L:55cm W:40cm H:24cm GW:9.30kg NW:7.80kg M => L:55cm W:40cm H:24cm GW:10.20kg NW:8.70kg L => L:60cm W:40cm H:24cm GW:10.50kg NW:9.00kg XL => L:60cm W:40cm H:24cm GW:11.60kg NW:10.10kg XXL => L:62cm W:40cm H:24cm GW:12.80kg NW:11.30kg 3XL => L:62cm W:40cm H:24cm GW:13.00kg NW:11.50kg

CARE LABEL

deetex.de

KARIBAN

REFERENCE : K343

NAME : HELIOS

SIZES : S_M_L_XL_XXL_3XL

COMPOSITION :
Main fabric : Cotton / Elastane 190 95%cotton / 5%elastane

WEIGHT :
Main fabric : 190 gsm

FABRIC CONSTRUCTION AND FINISHING :
Size 3XL only for Black and White

COLORS	PANTONE SERIGRAPHIE
Black	Black
White	White
Light grey	Cool gray 5C
Chocolate	439C
Navy	2965C
Dark grey	432C

DESCRIPTION

Français :	T-shirt homme manches longues encolure ronde
English :	Long sleeve T-shirt
Nederlands :	Heren T-shirt met ronde hals en lange mouwen
Deutsch :	Langarm herren T-shirt
Español :	Camiseta de manga larga y escote redondo
Italiano :	T-shirt uomo maniche lunghe
Português :	T-shirt de manga comprida

deetex.de

MEASUREMENT

Description	S	M	L	XL	XXL	3XL	
W05 1/2 largeur poitrine / 1/2 chest width	45,75	48,75	51,75	54,75	58,75	62,75	
H05 Hauteur totale / Total height	67	69	71	73	75,75	78,50	
H15 Longueur manche / Sleeve length	59,25	61,25	63,25	65,25	67,45	69,65	

PACKING

Box	25 pcs / box S => L:60cm W:38cm H:13cm GW:6.00kg NW:4.50kg M => L:60cm W:38cm H:13cm GW:7.00kg NW:5.50kg L => L:60cm W:38cm H:13cm GW:7.20kg NW:5.70kg XL => L:60cm W:38cm H:13cm GW:7.50kg NW:6.00kg XXL => L:60cm W:38cm H:13cm GW:8.00kg NW:6.50kg 3XL => L:60cm W:38cm H:13cm GW:8.80kg NW:7.30kg

CARE LABEL

KARIBAN

REFERENCE : K344

NAME : LS TIGER

SIZES : S_M_L_XL_XXL_3XL

COMPOSITION :

Main fabric : Jersey 165 100%cotton
Main fabric : Jersey 165 For contrasted yokes 100%cotton

WEIGHT :

Main fabric : 165 gsm
Main fabric : 165 gsm

COLORS	PANTONE SERIGRAPHIE
Navy / White	296C / White
Orange / White	021C / White
Sky blue / White	277C / White
Red / White	187C / White
Black / White	Black / White

DESCRIPTION

Français :	T-shirt manches longues bicolore
English :	Long sleeves bicolour T-shirt
Nederlands :	Tweekleurige T-shirt met lange mouwen
Deutsch :	Zweifarbiges langarm T-shirt
Español :	Camiseta bicolor de manga larga
Italiano :	T-shirt maniche lunghe bicolore
Português :	T-shirt Tiger manga comprida

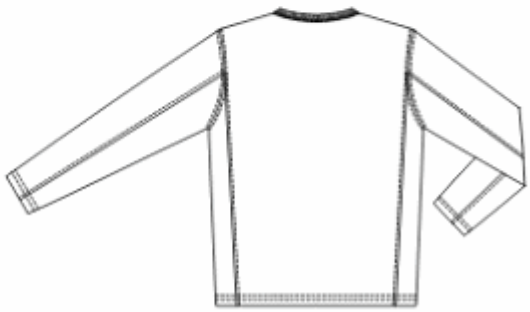

MEASUREMENT

Description	S	M	L	XL	XXL	3XL	
H05 Hauteur totale / Total height	68,50	70,50	72,50	74,50	77,25	80	
W05 1/2 largeur poitrine / 1/2 chest width	49	52	55	58	62	66	
H15 Longueur manche / Sleeve length	61	63	65	67	69	71	

PACKING

Box	50 pcs / box S => L:57cm W:37cm H:25cm GW:12.50kg NW:11.00kg M => L:57cm W:37cm H:25cm GW:12.50kg NW:11.00kg L => L:57cm W:39cm H:25cm GW:13.40kg NW:12.00kg XL => L:61cm W:39cm H:28cm GW:14.20kg NW:12.60kg XXL => L:61cm W:39cm H:28cm GW:14.30kg NW:12.70kg 25 pcs / box 3XL => L:61cm W:39cm H:15cm GW:11.00kg NW:10.00kg

CARE LABEL

eeetex.de

KARIBAN

REFERENCE : K347

NAME : TIGER KIDS

SIZES : 6/8_8/10_10/12_12/14

COMPOSITION :

Main fabric : Jersey 165 100%cotton
Main fabric : Jersey 165 For contrasted yokes 100%cotton

COLORS	PANTONE SERIGRAPHIE
Navy / White	296C / White
Sky blue / White	277C / White
Orange / White	021C / White
Red / White	187C / White

WEIGHT :

Main fabric : 165 gsm
Main fabric : 165 gsm

DESCRIPTION	
Français :	T-Shirt bicolore kids manches courtes
English :	Kids short sleeves bi-colour T-Shirt
Nederlands :	Tweekleurige T-Shirt kids
Deutsch :	Zweifarbiges T-Shirt für Kinder
Español :	Camiseta bicolor para ninos
Italiano :	T-Shirt bicolore bambino
Português :	T-shirt Tiger de criança

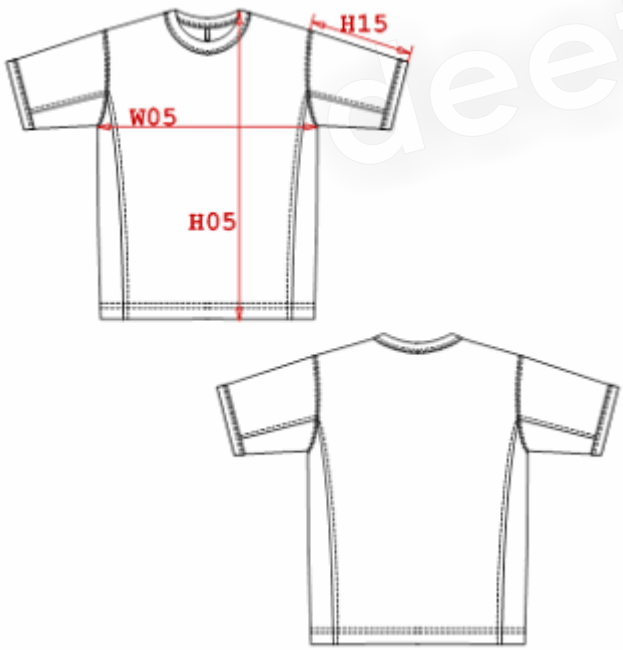

MEASUREMENT

Description	6/8	8/10	10/12	12/14			
H05 Hauteur totale/total height	51,40	53,85	56,30	58,75			
W05 1/2 largeur poitrine/1/2 chest width	38	41	44	47			
H15 Longueur dessus de manche / sleeve length	16,45	19,45	22,45	25,45			

PACKING

Box	100 pcs / box 6/8 => L:48cm W:33cm H:45cm GW:15.00kg NW:13.00kg 8/10 => L:48cm W:33cm H:41cm GW:15.00kg NW:13.00kg 10/12 => L:50cm W:34cm H:48cm GW:15.50kg NW:13.50kg 12/14 => L:50cm W:34cm H:48cm GW:15.50kg NW:13.50kg

CARE LABEL

deeteX.de

KARIBAN

REFERENCE : K353

NAME : CALYPSO

SIZES : S_M_L_XL_XXL_3XL

COMPOSITION :
Main fabric : Cotton / Elastane 190 95%cotton / 5%elastane

WEIGHT :
Main fabric : 190 gsm

COLORS	PANTONE SERIGRAPHIE
Black	Black
White	White
Navy	2965C
Dark grey	432C
Red	186C
Sky blue	277C

DESCRIPTION

Français :	T-shirt homme manches courtes encolure V
English :	Men's short sleeve V-neck T-shirt
Nederlands :	Heren T-shirt met V-hals en korte mouwen
Deutsch :	Herren T-shirt mit V-ausschnitt
Español :	Camiseta de manga corta y cuello de pico
Italiano :	T-shirt uomo maniche corte scollo a V
Português :	T-shirt manga curta decote V

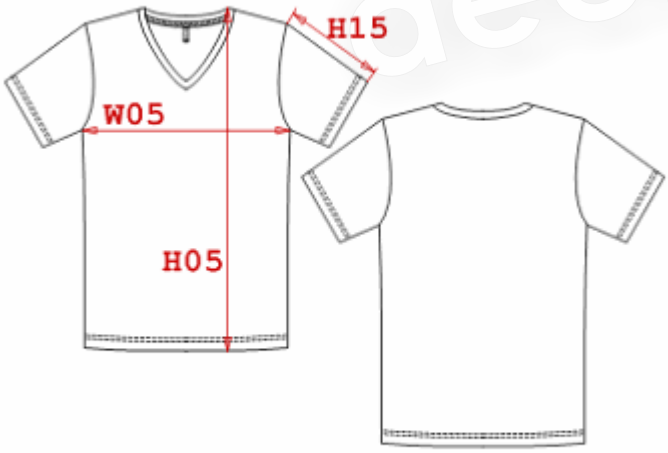

MEASUREMENT

Description	S	M	L	XL	XXL	3XL	
W05 1/2 largeur poitrine / 1/2 chest width	45,75	48,75	51,75	54,75	58,75	62,75	
H05 Hauteur totale / Total height	67	69	71	73	75,75	78,50	
H15 Longueur manche / Sleeve length	18	19	20	21	22,20	23,40	

PACKING

Box	50 pcs / box S => L:55cm W:40cm H:24cm GW:9.00kg NW:7.50kg M => L:55cm W:40cm H:24cm GW:10.20kg NW:8.70kg L => L:60cm W:40cm H:24cm GW:10.80kg NW:9.30kg XL => L:60cm W:40cm H:24cm GW:11.70kg NW:10.20kg XXL => L:62cm W:40cm H:24cm GW:12.60kg NW:11.10kg 3XL => L:62cm W:40cm H:24cm GW:13.70kg NW:12.20kg

CARE LABEL

deeter.de

KARIBAN

REFERENCE : K354

NAME : CHARLY

SIZES : S_M_L_XL_XXL_3XL

COLORS	PANTONE SERIGRAPHIE
White	White

COMPOSITION :
Main fabric : Polyester 160 100%polyester

WEIGHT :
Main fabric : 160 gsm

FABRIC CONSTRUCTION AND FINISHING :
Single jersey

DESCRIPTION	
Français :	T-shirt sublimation
English :	Sublimation T-shirt
Nederlands :	Sublimatie T-shirt
Deutsch :	Sublimations T-shirt
Español :	Camiseta de sublimación
Italiano :	T-shirt "sublimation"
Português :	T-shirt para sublimação

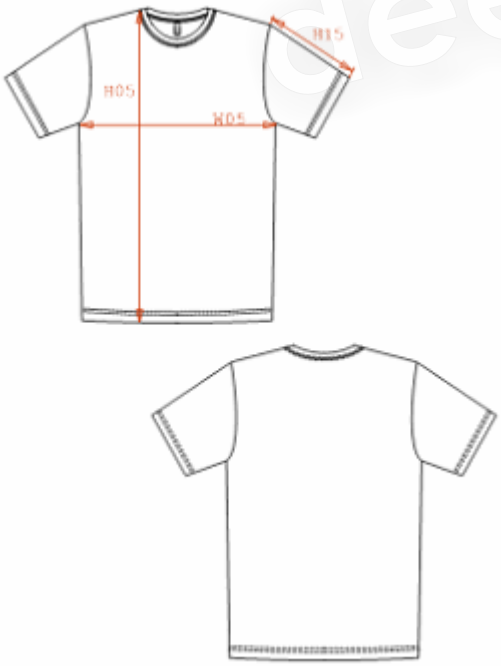

MEASUREMENT							
Description	**S**	**M**	**L**	**XL**	**XXL**	**3XL**	
H05 Hauteur totale dvt/ Front total height	**69,35**	**71,35**	**73,35**	**75,35**	**78,10**	**80,85**	
W05 1/2 largeur poitrine/1/2 chest width	**48,05**	**51,05**	**54,05**	**57,05**	**61,05**	**65,05**	
H15 Longueur manche / Sleeve length	**21,30**	**21,80**	**22,30**	**22,80**	**23,50**	**24,20**	

PACKING	
Box	50 pcs / box S => L:60cm W:40cm H:20cm GW:7.40kg NW:5.90kg M => L:60cm W:40cm H:20cm GW:8.40kg NW:6.50kg L => L:60cm W:40cm H:20cm GW:8.50kg NW:7.00kg XL => L:60cm W:40cm H:22cm GW:9.30kg NW:7.50kg XXL => L:60cm W:40cm H:22cm GW:10.20kg NW:8.20kg 3XL => L:60cm W:40cm H:22cm GW:10.80kg NW:8.90kg

CARE LABEL

deetex.de

KARIBAN

REFERENCE : K355

NAME :

SIZES : S_M_L_XL_XXL_3XL

COLORS	PANTONE SERIGRAPHIE
Black	Black
White	White

COMPOSITION :

Main fabric : Cotton / Elastane 190 95%cotton / 5%elastane

WEIGHT :

Main fabric : 190 gsm

DESCRIPTION	
Français :	T-shirt homme manches longues encolure V
English :	Men's long sleeve V-neck T-shirt
Nederlands :	Heren T-shirt met V-hals en lange mouwen
Deutsch :	Herren langarm T-shirt mit V-ausschnitt
Español :	Camiseta de manga larga y cuello de pico
Italiano :	T-shirt uomo maniche lunghe scollo a V
Português :	T-shirt de homem manga comprida decote V

MEASUREMENT

Description	S	M	L	XL	XXL	3XL	
W05 1/2 largeur poitrine / 1/2 chest width	67	69	71	73	75,75	78,50	
H05 Hauteur totale / Total height	45,75	48,75	51,75	54,75	58,75	62,75	
H15 Longueur manche / Sleeve length	59,25	61,25	63,25	65,25	67,45	69,65	

PACKING

Box	50 pcs / box S => L:60cm W:40cm H:22cm GW:12.50kg NW:10.90kg M => L:60cm W:40cm H:22cm GW:13.30kg NW:11.60kg L => L:60cm W:40cm H:22cm GW:14.20kg NW:12.50kg XL => L:62cm W:42cm H:22cm GW:14.90kg NW:13.50kg XXL => L:62cm W:42cm H:22cm GW:15.90kg NW:14.50kg 3XL => L:62cm W:42cm H:22cm GW:17.00kg NW:15.50kg

CARE LABEL

peeteX.de

KARIBAN

REFERENCE : K356

NAME :

SIZES : S_M_L_XL_XXL_3XL_4XL

COMPOSITION :

Main fabric : Good carded cotton single jersey 180 100%cotton

WEIGHT :

Main fabric : 180 gsm

FABRIC CONSTRUCTION AND FINISHING :

Gauge 24gg Enzyme washed fabric

COLORS	PANTONE SERIGRAPHIE
White	White
Black	Black
Navy	2965C
Dark grey	432C
Red	186C
Orange	1585C
Sky blue	7695C
Dark khaki	418C
Yellow	123C
Light royal blue	2935C

DESCRIPTION

Français :	T-shirt homme manches courtes encolure ronde
English :	Men's short sleeve round neck T-shirt
Nederlands :	Heren T-shirt met ronde hals en korte mouwen
Deutsch :	Herren kurzarm rundhals T-shirt
Español :	Camiseta de manga corta y escote redondo
Italiano :	T-shirt uomo maniche corte scollo tondo
Português :	T-shirt de homem manga curta decote redondo

CARE LABEL

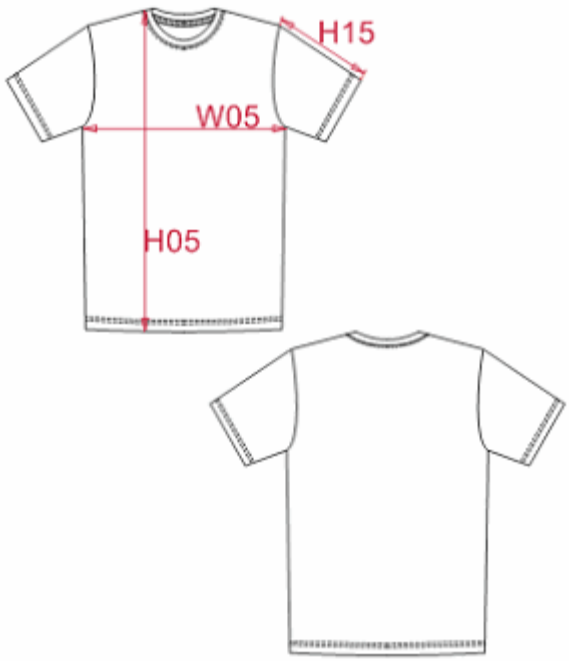

MEASUREMENT

Description	S	M	L	XL	2XL	3XL	4XL
H05 Hauteur totale / Total height	69,50	71,50	73,50	75,50	78,25	81	83
W05 1/2 largeur poitrine/1/2 chest width	48	51	54	57	61	65	68
H15 Longueur manche / Sleeve length	20,50	21,50	22,50	23,50	25	26,50	27,50

PACKING

Box	50 pcs / box S => L:56cm W:39cm H:22cm GW:9.00kg NW:7.50kg M => L:56cm W:39cm H:22cm GW:10.00kg NW:8.50kg L => L:56cm W:39cm H:22cm GW:10.50kg NW:9.00kg XL => L:62cm W:40cm H:22cm GW:11.20kg NW:9.70kg XXL => L:62cm W:40cm H:22cm GW:12.00kg NW:10.50kg 3XL => L:68cm W:42cm H:22cm GW:12.70kg NW:11.00kg 4XL => L:68cm W:42cm H:22cm GW:13.40kg NW:11.70kg

textilex.de

KARIBAN

REFERENCE : K357

NAME :

SIZES : S_M_L_XL_XXL_3XL_4XL

COMPOSITION :

Main fabric : Good carded cotton single jersey 180 100%cotton

WEIGHT :

Main fabric : 180 gsm

FABRIC CONSTRUCTION AND FINISHING :

Gauge 24gg Enzyme washed fabric

COLORS	PANTONE SERIGRAPHIE
White	White
Black	Black
Navy	2965C
Dark grey	432C
Red	186C
Orange	1585C
Sky blue	7695C
Dark khaki	418C
Yellow	123C
Light royal blue	2935C

DESCRIPTION

Français :	T-shirt homme manches courtes encolure V
English :	Men's short sleeve V-neck T-shirt
Nederlands :	Heren T-shirt met V-hals en korte mouwen
Deutsch :	Herren kurzarm T-shirt mit V-ausschnitt
Español :	Camiseta de manga corta y cuello de pico
Italiano :	T-shirt uomo maniche corte scollo a V
Português :	T-shirt de homem manga curta decote V

CARE LABEL

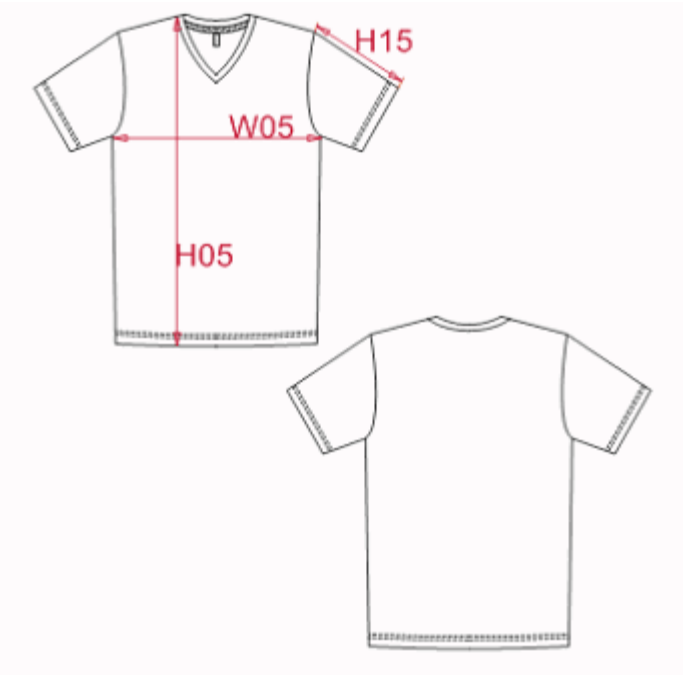

MEASUREMENT

Description	S	M	L	XL	2XL	3XL	4XL
H05 Hauteur totale / Total height	69,50	71,50	73,50	75,50	78,25	81	83
W05 1/2 largeur poitrine/1/2 chest width	48	51	54	57	61	65	68
H15 Longueur manche / Sleeve length	20,50	21,50	22,50	23,50	25	26,50	27,50

PACKING

Box	50 pcs / box S => L:56cm W:39cm H:22cm GW:9.00kg NW:7.50kg M => L:56cm W:39cm H:22cm GW:10.00kg NW:8.50kg L => L:56cm W:39cm H:22cm GW:10.50kg NW:9.00kg XL => L:62cm W:40cm H:22cm GW:11.20kg NW:9.70kg XXL => L:62cm W:40cm H:22cm GW:12.00kg NW:10.50kg 3XL => L:68cm W:42cm H:22cm GW:12.70kg NW:11.00kg 4XL => L:68cm W:42cm H:22cm GW:13.40kg NW:11.70kg

KARIBAN

REFERENCE : K358

NAME :

SIZES : S_M_L_XL_XXL_3XL_4XL

COMPOSITION :

Main fabric : Good carded cotton single jersey 180 100%cotton

WEIGHT :

Main fabric : 180 gsm

FABRIC CONSTRUCTION AND FINISHING :

Gauge 24gg Enzyme washed fabric

COLORS	PANTONE SERIGRAPHIE
White	White
Black	Black
Navy	2965C
Dark grey	432C
Red	186C
Orange	1585C
Sky blue	7695C
Dark khaki	418C
Yellow	123C
Light royal blue	2935C

DESCRIPTION

Français :	T-shirt homme manches longues encolure V
English :	Men's long sleeve V-neck T-shirt
Nederlands :	Heren T-shirt met V-hals en lange mouwen
Deutsch :	Herren langarm T-shirt mit V-ausschnitt
Español :	Camiseta de manga larga y cuello de pico
Italiano :	T-shirt uomo maniche lunghe scollo a V
Português :	T-shirt de homem manga comprida decote V

CARE LABEL

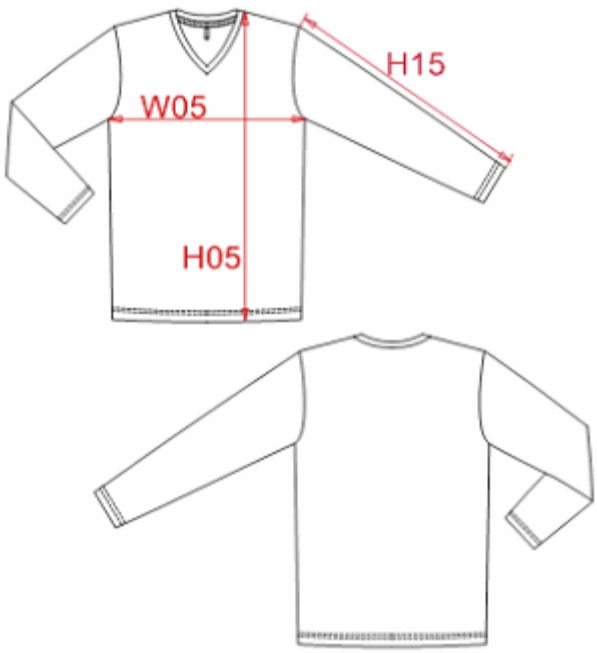

MEASUREMENT

Description	S	M	L	XL	2XL	3XL	4XL
H05 Hauteur totale / Total height	69,50	71,50	73,50	75,50	78,25	81	83
W05 1/2 largeur poitrine/1/2 chest width	48	51	54	57	61	65	68
H15 Longueur manche / Sleeve length	64	66	68	70	72,20	74,40	76,40

PACKING

Box	50 pcs / box S => L:52cm W:37cm H:24cm GW:11.20kg NW:9.60kg M => L:52cm W:37cm H:24cm GW:12.40kg NW:10.80kg L => L:58cm W:39cm H:25cm GW:13.40kg NW:11.60kg XL => L:58cm W:39cm H:25cm GW:14.00kg NW:12.20kg XXL => L:58cm W:40cm H:26cm GW:15.00kg NW:13.00kg 3XL => L:62cm W:42cm H:26cm GW:16.00kg NW:13.80kg 4XL => L:62cm W:42cm H:26cm GW:14.60kg NW:16.80kg

KARIBAN

REFERENCE : K359

NAME :

SIZES : S_M_L_XL_XXL_3XL_4XL

COMPOSITION :

Main fabric : Good carded cotton single jersey 180 100%cotton

WEIGHT :

Main fabric : 180 gsm

FABRIC CONSTRUCTION AND FINISHING :

Gauge 24gg Enzyme washed fabric

COLORS	PANTONE SERIGRAPHIE
White	White
Black	Black
Navy	2965C
Dark grey	432C
Red	186C
Orange	1585C
Sky blue	7695C
Dark khaki	418C
Yellow	123C
Light royal blue	2935C

DESCRIPTION

Français :	T-shirt homme manches longues encolure ronde
English :	Men's long sleeve round neck T-shirt
Nederlands :	Heren T-shirt met ronde hals en lange mouwen
Deutsch :	Herren langarm rundhals T-shirt
Español :	Camiseta de manga larga y escote redondo
Italiano :	T-shirt uomo maniche lunghe scollo tondo
Português :	T-shirt de homem manga comprida decote redondo

CARE LABEL

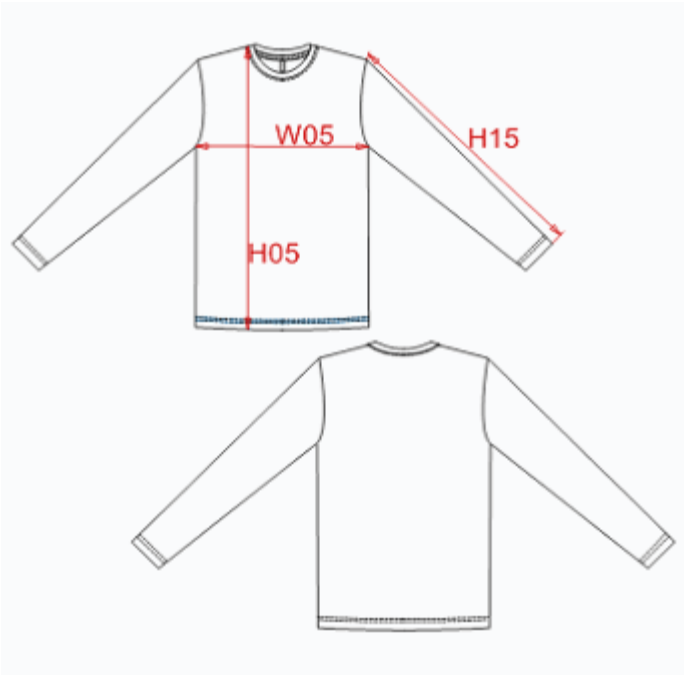

MEASUREMENT

Description	S	M	L	XL	2XL	3XL	4XL
H05 Hauteur totale / Total height	69,50	71,50	73,50	75,50	78,25	81	83
W05 1/2 largeur poitrine/1/2 chest width	48	51	54	57	61	65	68
H15 Longueur manche / Sleeve length	64	66	68	70	72,20	74,40	76,40

PACKING

Box	50 pcs / box S => L:52cm W:37cm H:24cm GW:11.20kg NW:9.60kg M => L:52cm W:37cm H:24cm GW:12.40kg NW:10.80kg L => L:58cm W:39cm H:25cm GW:13.40kg NW:11.60kg XL => L:58cm W:39cm H:25cm GW:14.00kg NW:12.20kg XXL => L:58cm W:40cm H:26cm GW:15.00kg NW:13.00kg 3XL => L:62cm W:42cm H:26cm GW:16.00kg NW13.80:kg 4XL => L:62cm W:42cm H:26cm GW:16.80kg NW:14.60kg

KARIBAN

REFERENCE : K380

NAME :

SIZES : S_M_L_XL_XXL_3XL

COMPOSITION :

Main fabric : Good carded cotton single jersey 180 100%cotton

WEIGHT :

Main fabric : 180 gsm

FABRIC CONSTRUCTION AND FINISHING :

Gauge 24gg Enzyme washed fabric

COLORS	PANTONE SERIGRAPHIE
White	White
Black	Black
Navy	2965C
Dark grey	432C
Red	186C
Orange	1585C
Sky blue	7695C
Dark khaki	418C
Yellow	123C
Light royal blue	2935C

DESCRIPTION

Français :	T-shirt feme manches courtes encolure ronde
English :	Ladies short sleeve round neck T-shirt
Nederlands :	Dames T-shirt met ronde hals en korte mouwen
Deutsch :	Damen kurzarm rundhals T-shirt
Español :	Camiseta de manga corta y escote redondo para mujer
Italiano :	T-shirt donna maniche corte scollo tondo
Português :	T-shirt de senhora de manga curta

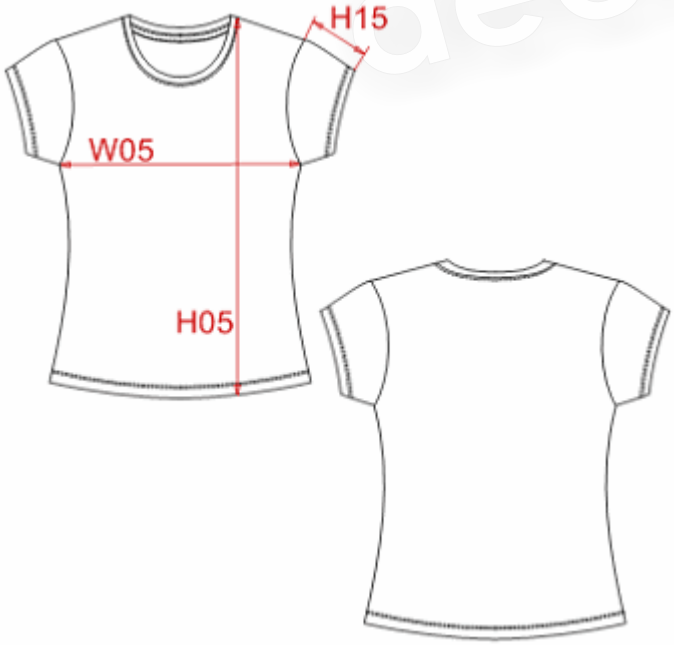

MEASUREMENT

Description	S	M	L	XL	2XL	3XL	
H05 Hauteur totale / Total height	59,50	61	63,25	65,50	67,75	70	
W05 1/2 largeur poitrine / 1/2 chest width	43	45	48	51	54	57	
H15 Longueur manche / Sleeve length	14	14,50	15,25	16	16,75	17,50	

PACKING

Box	50 pcs / box S => L:46cm W:34cm H:20cm GW:6.00kg NW:5.00kg M => L:46cm W:34cm H:20cm GW:6.40kg NW:5.40kg L => L:52cm W:38cm H:20cm GW:7.20kg NW:6.00kg XL => L:52cm W:38cm H:20cm GW:7.70kg NW:6.50kg XXL => L:58cm W:40cm H:20cm GW:8.50kg NW:7.10kg 3XL => L:58cm W:40cm H:20cm GW:9.00kg NW:7.60kg

CARE LABEL

deetex.de

KARIBAN

REFERENCE : K381

NAME :

SIZES : S_M_L_XL_XXL_3XL

COMPOSITION :

Main fabric : Good carded cotton single jersey 180 100%cotton

WEIGHT :

Main fabric : 180 gsm

FABRIC CONSTRUCTION AND FINISHING :

Gauge 24gg Enzyme washed fabric

COLORS	PANTONE SERIGRAPHIE
White	White
Black	Black
Navy	2965C
Dark grey	432C
Red	186C
Orange	1585C
Sky blue	7695C
Dark khaki	418C
Yellow	123C
Light royal blue	2935C

DESCRIPTION

Français :	T-shirt femme manches courtes encolure V
English :	Ladies short sleeve V-neck T-shirt
Nederlands :	Dames T-shirt met V-hals en korte mouwen
Deutsch :	Damen kurzarm T-shirt mit V-ausschnitt
Español :	Camiseta de manga corta y cuello de pico para mujer
Italiano :	T-shirt donna maniche corte scollo a V
Português :	T-shirt de senhora de manga curta e decote V

MEASUREMENT

Description	S	M	L	XL	2XL	3XL	
H05 Hauteur totale / Total height	59,50	61	63,25	65,50	67,75	70	
W05 1/2 largeur poitrine / 1/2 chest width	43	45	48	51	54	57	
H15 Longueur manche / Sleeve length	14	14,50	15,25	16	16,75	17,50	

PACKING

Box	50 pcs / box S => L:46cm W:34cm H:20cm GW:6.00kg NW:5.00kg M => L:46cm W:34cm H:20cm GW:6.40kg NW:5.40kg L => L:52cm W:38cm H:20cm GW:7.20kg NW:6.00kg XL => L:52cm W:38cm H:20cm GW:7.70kg NW:6.50kg XXL => L:58cm W:40cm H:20cm GW:8.50kg NW:7.10kg 3XL => L:58cm W:40cm H:20cm GW:9.00kg NW:7.60kg

CARE LABEL

deeiex.de

KARIBAN

REFERENCE : K382

NAME :

SIZES : S_M_L_XL_XXL_3XL

COMPOSITION :

Main fabric : Good carded cotton single jersey 180 100%cotton

WEIGHT :

Main fabric : 180 gsm

FABRIC CONSTRUCTION AND FINISHING :

Gauge 24gg Enzyme washed fabric

COLORS	PANTONE SERIGRAPHIE
White	White
Black	Black
Navy	2965C
Dark grey	432C
Red	186C
Orange	1585C
Sky blue	7695C
Yellow	123C
Light royal blue	2935C
Dark khaki	418C

DESCRIPTION

Français :	T-shirt femme manches longues encolure V
English :	Ladies long sleeve V-neck T-shirt
Nederlands :	Dames T-shirt met V-hals en lange mouwen
Deutsch :	Damen langarm-T-shirt mit V-ausschnitt
Español :	Camiseta de manga larga y cuello de pico para mujer
Italiano :	T-shirt donna maniche lunghe scollo a V
Português :	T-shirt de senhora de manga comprida e decote V

MEASUREMENT

Description	S	M	L	XL	2XL	3XL	
H05 Hauteur totale / Total height	59,50	61	63,25	65,50	67,75	70	
W05 1/2 largeur poitrine / 1/2 chest width	43	45	48	51	54	57	
H15 Longueur manche / Sleeve length	60	61	62,50	64	65,50	67	

PACKING

Box	50 pcs / box S => L:48cm W:32cm H:25cm GW:8.60kg NW:7.20kg M => L:48cm W:32cm H:25cm GW:9.20kg NW:7.80kg L => L:54cm W:34cm H:25cm GW:9.70kg NW:8.20kg XL => L:54cm W:34cm H:25cm GW:10.50kg NW:9.00kg XXL => L:58cm W:36cm H:25cm GW:11.20kg NW:9.60kg 3XL => L:58cm W:36cm H:25cm GW:12.00kg NW:10.40kg

CARE LABEL

deetex.de

KARIBAN

REFERENCE : K383

NAME :

SIZES : S_M_L_XL_XXL_3XL

COMPOSITION :

Main fabric : Good carded cotton single jersey 180 100%cotton

WEIGHT :

Main fabric : 180 gsm

FABRIC CONSTRUCTION AND FINISHING :

Gauge 24gg Enzyme washed fabric

COLORS	PANTONE SERIGRAPHIE
White	White
Black	Black
Navy	2965C
Dark grey	432C
Red	186C
Orange	1585C
Sky blue	7695C
Dark khaki	418C
Yellow	123C
Light royal blue	2935C

DESCRIPTION

Français :	T-shirt femme manches longues encolure ronde
English :	Ladies long sleeve round neck T-shirt
Nederlands :	Dames T-shirt met ronde hals en lange mouwen
Deutsch :	Damen langarm rundhals T-shirt
Español :	Camiseta de manga larga y escote redondo para mujer
Italiano :	T-shirt donna maniche lunghe scollo tondo
Português :	T-shirt de senhora de manga comprida e decote redondo

MEASUREMENT

Description	S	M	L	XL	2XL	3XL	
H05 Hauteur totale / Total height	59,50	61	63,25	65,50	67,75	70	
W05 1/2 largeur poitrine / 1/2 chest width	43	45	48	51	54	57	
H15 Longueur manche / Sleeve length	60	61	62,50	64	65,50	67	

PACKING

Box	50 pcs / box S => L:48cm W:32cm H:25cm GW:8.60kg NW:7.20kg M => L:48cm W:32cm H:25cm GW:9.20kg NW:7.80kg L => L:54cm W:34cm H:25cm GW:9.70kg NW:8.20kg XL => L:54cm W:34cm H:25cm GW:10.50kg NW:9.00kg XXL => L:58cm W:36cm H:25cm GW:11.20kg NW:9.60kg 3XL => L:58cm W:36cm H:25cm GW:12.00kg NW:10.40kg

CARE LABEL

deeflex.de

REFERENCE : K400

NAME :

SIZES : S_M_L_XL_XXL_3XL_4XL

COMPOSITION :

Fabric 1 : Softshell 300 95%polyester / 5%elastane

COLORS	PANTONE SERIGRAPHIE
Black	Black
Navy	296C
Red	186C
Dark chocolate	Black 4C
White	White
Aqua blue	7690C
Titanium	7540C

WEIGHT :

Fabric 1 : 300 gsm

FABRIC CONSTRUCTION AND FINISHING :

3 layers bonded (outer: 95%polyester 5%elastane / performance membrane / inner: microfleece polar) BR: 3000gsm/24h / WP: 8000mm

DESCRIPTION

Français :	Veste femme softshell
English :	Ladies soft shell jacket
Nederlands :	Dames soft shell
Deutsch :	Damen soft shell jacke
Español :	Chaqueta softshell para mujer
Italiano :	Giacca donna softshell
Português :	Blusão softshell de senhora

CARE LABEL

MEASUREMENT

Description	S	M	L	XL	2XL	3XL	4XL
W05 1/2 largeur poitrine avec zip / 1/2 chest width with zipper	47,95	49,95	52,95	55,95	58,95	61,95	64,95
H05 Hauteur totale devant / Front total height	64,50	66	68,25	70,50	72,75	75	77,25
H15 Longueur dessus de manche / Sleeve length	62,60	63,45	64,70	66	67,25	68,55	69,80

PACKING

Box	10 pcs / box S => L:50cm W:35cm H:18cm GW:8.00kg NW:6.50kg M => L:50cm W:35cm H:18cm GW:8.00kg NW:6.50kg L => L:50cm W:35cm H:18cm GW:8.00kg NW:6.50kg XL => L:58cm W:37.5cm H:18cm GW:8.50kg NW:7.00kg XXL => L:58cm W:37.5cm H:18cm GW:8.50kg NW:7.00kg 3XL => L:62cm W:40cm H:18cm GW:9.00kg NW:7.50kg 4XL => L:62cm W:40cm H:18cm GW:9.00kg NW:7.50kg

REFERENCE : K401

NAME :

SIZES : S_M_L_XL_XXL_3XL_4XL

COMPOSITION :

Fabric 1 : Softshell 300 95%polyester / 5%elastane

COLORS	PANTONE SERIGRAPHIE
Black	Black
Navy	296C
Red	186C
Dark chocolate	Black 4C
White	White
Aqua blue	7690C
Titanium	7540C

WEIGHT :

Fabric 1 : 300 gsm

FABRIC CONSTRUCTION AND FINISHING :

3 layers bonded (outer: 95%polyester 5%elastane / performance membrane / inner: microfleece polar) BR: 3000gsm/24h / WP: 8000mm

DESCRIPTION

Français :	Veste homme softshell
English :	Soft shell jacket
Nederlands :	Heren soft shell
Deutsch :	Herren soft shell jacke
Español :	Chaqueta softshell para hombre
Italiano :	Giubbotto uomo softshell
Português :	Blusão softshell de homem

CARE LABEL

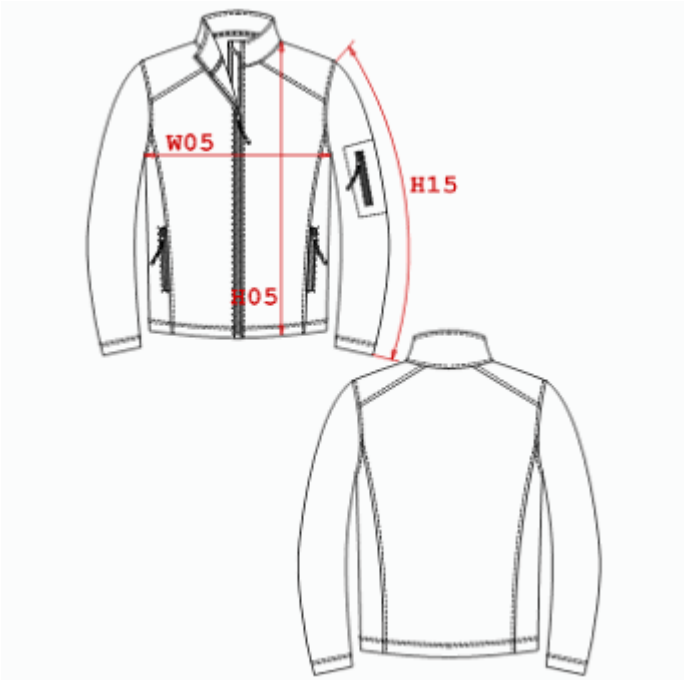

MEASUREMENT

Description	S	M	L	XL	2XL	3XL	4XL
W05 1/2 largeur poitrine avec zip / 1/2 chest width with zipper	53,50	56,50	59,50	62,50	65,50	69,50	73,50
H05 Hauteur totale devant / Front total height	72,15	74,15	76,15	78,15	80,15	82,90	85,65
H15 Longueur dessus de manche / Sleeve length	64,10	66,10	68,10	70,10	72,10	74,75	77,50

PACKING

Box	10 pcs / box S => L:57cm W:37.5cm H:19cm GW:8.5kg NW:7kg M => L:57cm W:37.5cm H:19cm GW:8.5kg NW:7kg L => L:57cm W:37.5cm H:19cm GW:8.5kg NW:7kg XL =>L:64cm W:37.5cm H:19cm GW:9.50kg NW:8.00kg XXL =>L:64cm W:37.5cm H:19cm GW:9.50kg NW:8.00kg 3XL =>L:67cm W:40cm H:19cm GW:10kg NW:8.5kg 4XL =>L:67cm W:40cm H:19cm GW:10kg NW:8.5kg

KARIBAN

REFERENCE : K402

NAME :

SIZES : 6/8_8/10_10/12_12/14

COMPOSITION :

Fabric 1 : Softshell 300 95%polyester / 5%elastane

COLORS	PANTONE SERIGRAPHIE
Black	Black
Red	186C
Navy	296C
Aqua blue	7690C

WEIGHT :

Fabric 1 : 300 gsm

FABRIC CONSTRUCTION AND FINISHING :

3 layers bonded (outer: 95%polyester 5% elastane / performance membrane / inner: microfleece polar) BR: 3000gsm/24h / WP: 8000mm

DESCRIPTION

Français :	Veste enfant softshell
English :	Kids soft shell jacket
Nederlands :	Kids soft shell
Deutsch :	Kinder soft shell jacke
Español :	Chaqueta softshell para niño
Italiano :	Giacca bambino softshell
Português :	Blusão softshell de criança

deetex.de

MEASUREMENT

Description	6/8	8/10	10/12	12/14			
W05 1/2 largeur poitrine avec zip / 1/2 chest width with zipper	40,05	43	46	49			
H05 Hauteur totale devant / Front total height	50,70	55,50	60,35	65,15			
H15 Longueur dessus de manche / Sleeve length	45	49,05	53,10	57,15			

PACKING

Box	10 pcs / box 6/8 => L:48cm W:34cm H:18cm GW:8.5kg NW:7.00kg 8/10=> L:48cm W:34cm H:18cm GW:8.5kg NW:7.00kg 10/12=>L:48cm W:34cm H:18cm GW:8.5kg NW:7.00kg 12/14=>L:48cm W:34cm H:18cm GW:8.50kg NW:7.00kg

CARE LABEL

KARIBAN

REFERENCE : K403

NAME :

SIZES : S_M_L_XL_XXL_3XL_4XL

COMPOSITION :

Fabric 1 : Softshell 300 95%polyester / 5%elastane

COLORS	PANTONE SERIGRAPHIE
Black	Black
Navy	296C
Red	186C
White	White
Aqua blue	7690C
Titanium	7540C

WEIGHT :

Fabric 1 : 300 gsm

FABRIC CONSTRUCTION AND FINISHING :

3 layers bonded (outer: 95%polyester 5%elastane / performance membrane / inner: microfleece polar) BR: 3000gsm/24h / WP: 8000mm

DESCRIPTION

Français :	Bodywarmer homme softshell
English :	Soft shell bodywarmer
Nederlands :	Heren bodywarmer soft shell
Deutsch :	Herren soft shell bodywarmer
Español :	Chaleco softshell para hombre
Italiano :	Bodywarmer uomo softshell
Português :	Colete softshell de homem

deetex.de

MEASUREMENT

Description	S	M	L	XL	2XL	3XL	4XL
W05 1/2 largeur poitrine avec zip / 1/2 chest width with zipper	52,40	55,40	58,40	61,40	65,40	69,40	73,40
H05 Hauteur totale devant / Front total height	72	74	76	78	80,75	83,50	86,25

PACKING

Box	10 pcs / box S => L:57cm W:37.5cm H:15cm GW:6.00kg NW:4.50kg M => L:57cm W:37.5cm H:15cm GW:6.00kg NW:4.50kg L => L:57cm W:37.5cm H:15cm GW:6.00kg NW:4.50kg XL => L:64cm W:40.5cm H:15cm GW:7.00kg NW:5.50kg XXL => L:64cm W:40.5cm H:15cm GW:7.00kg NW:5.50kg 3XL => L:64cm W:40.5cm H:15cm GW:7.00kg NW:5.50kg 4XL => L:64cm W:40.5cm H:15cm GW:7.00kg NW:5.50kg

CARE LABEL

KARIBAN

REFERENCE : K404

NAME :

SIZES : S_M_L_XL_XXL_3XL_4XL

COMPOSITION :

Fabric 1 : Softshell 300 95%polyester / 5%elastane

COLORS	PANTONE SERIGRAPHIE
Black	Black
Navy	296C
Red	186C
White	White
Aqua blue	7690C
Titanium	7540C

WEIGHT :

Fabric 1 : 300 gsm

FABRIC CONSTRUCTION AND FINISHING :

3 layers bonded (outer: 95%polyester 5% elastane / performance membrane / inner: microfleece polar BR: 3000gsm/24h / WP: 8000mm

DESCRIPTION

Français :	Bodywarmer femme sotshell
English :	Ladies soft shell bodywarmer
Nederlands :	Dames bodywarmer soft shell
Deutsch :	Damen soft shell bodywarmer
Español :	Chaleco softshell para mujer
Italiano :	Bodywarmer donna softshell
Português :	Colete softshell de senhora

deetex.de

MEASUREMENT

Description	S	M	L	XL	2XL	3XL	4XL
W05 1/2 largeur poitrine avec zip / 1/2 chest width with zipper	48,70	50,70	53,70	56,70	59,70	62,70	65,70
H05 Hauteur totale devant / Front total height	63,90	65,40	67,65	69,90	72,15	74,40	76,65

PACKING

Box	10 pcs / box S => L:55cm W:36cm H:15cm GW:5.00kg NW:3.50kg M => L:55cm W:36cm H:15cm GW:5.00kg NW:3.50kg L => L:55cm W:36cm H:15cm GW:5.00kg NW:3.50kg XL => L:55cm W:36cm H:15cm GW:5.00kg NW:3.50kg XXL => L:62cm W:37.5cm H:15cm GW:5.50kg NW:4.00kg 3XL => L:62cm W:37.5cm H:15cm GW:5.50kg NW:4.00kg 4XL => L:62cm W:37.5cm H:15cm GW:5.50kg NW:4.00kg

CARE LABEL

KARIBAN

REFERENCE : K405

NAME :

SIZES : S_M_L_XL_XXL

COLORS	PANTONE SERIGRAPHIE
Black / Dark grey	Black / 426C
Burnt orange / Dark grey	1525C / 426C
Navy / Dark grey	296C / 426C

COMPOSITION :

Main fabric : Ribstop softshell 320 95%polyester / 5%elastane
Main fabric : Ribstop softshell 320 For contrasted yokes 95%polyester / 5%elastane

WEIGHT :

Main fabric : 320 gsm
Main fabric : 320 gsm

FABRIC CONSTRUCTION AND FINISHING :

3 layers bonded (outer: 95%polyester 5%elastane / performance membrane / inner: microfleece polar) BR: 3000gsm/24h / WP: 8000mm

DESCRIPTION

Français :	Veste sotshell ripstp bicolore
English :	Bi-colour ripstop soft shell jacket
Nederlands :	Tweekleurige ribstop softshell vest
Deutsch :	Zweifarbige rippstop softshell jacke
Español :	Chaqueta sotshell ripstop bicolor
Italiano :	Giacca softshell ripstop bodywarmer
Português :	Blusão softshell bicolor

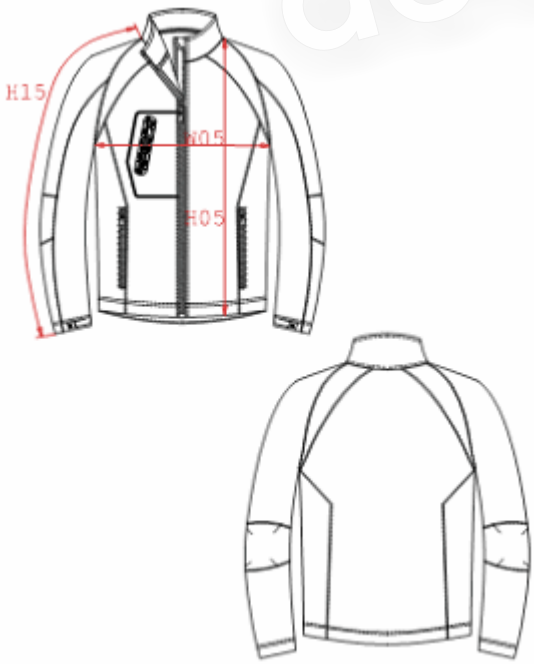

MEASUREMENT

Description	S	M	L	XL	XXL		
W05 1/2 largeur poitrine avec zip / 1/2 chest width with zipper	54	57	60	63	67		
H05 Hauteur totale devant / Total front height	71,35	73,35	75,35	77,35	80,10		
H15 Longueur manche / Sleeve length	76,50	79,25	82	84,75	88,50		

PACKING

Box	10 pcs / box S => L:60cm W:42cm H:20cm GW:8.50kg NW:7.50kg M => L:60cm W:42cm H:20cm GW:8.50kg NW:7.50kg L => L:60cm W:42cm H:20cm GW:8.50kg NW:7.50kg XL => L:65cm W:44cm H:20cm GW:8.50kg NW:7.50kg XXL => L:60cm W:42cm H:20cm GW:8.50kg NW:7.50kg

CARE LABEL

aeetex.de

KARIBAN

REFERENCE : K408

NAME :

SIZES : M_L_XL_XXL

COLORS	PANTONE SERIGRAPHIE
Black	Black

COMPOSITION :

Main fabric : Softshell 330 96%polyester / 4%elastane

WEIGHT :

Main fabric : 330 gsm

FABRIC CONSTRUCTION AND FINISHING :

3 layers bonded (outer: 96%polyester 4%elastane / performance membrane / inner: microfleece polar) BR: 1500gsm/24h / WP: 8000mm

DESCRIPTION

Français :	Parka softshell capuche
English :	Soft shell parka jacket
Nederlands :	Softshellparka met kap
Deutsch :	Softshell parka mit kapuze
Español :	Parka softshell con capucha
Italiano :	Parka softshell con cappuccio
Português :	Parka softshell com capuz

MEASUREMENT

Description	M	L	XL	XXL			
W05 1/2 largeur poitrine avec zip / 1/2 chest width with zipper	58,75	61,70	65,70	69,70			
H05 Hauteur totale devant / Total front height	80,85	82,90	85,65	88,40			
H15 Longueur manche / Sleeve length	64,15	66	68,50	71,05			

PACKING

Box	10 pcs / box M => L:58cm W:39cm H:29cm GW:11.50kg NW:10.00kg L => L:60cm W:40cm H:29cm GW:12.00kg NW:10.50kg XL => L:64cm W:41cm H:29cm GW:12.50kg NW:11.00kg XXL => L:66cm W:42cm H:29cm GW:13.50kg NW:12.00kg

CARE LABEL

preetex.de

KARIBAN

REFERENCE : K442

NAME :

SIZES : XS_S_M_L_XL_XXL_3XL_4XL

COMPOSITION :

Main fabric : Brushed Cotton / Polyester fleece 360
80%cotton / 20%polyester

WEIGHT :

Main fabric : 360 gsm

FABRIC CONSTRUCTION AND FINISHING :

28/1's 75D & 10/1's - 20GG Low shrinkage / Silicon finish

COLORS	PANTONE SERIGRAPHIE
White	White
Black	Black
Navy	296C
Dark grey	432C
Red	186C
Dark khaki	418C
Light royal blue	2935C
Oxford grey	Cool gray 6C

DESCRIPTION

Français :	Sweat-shirt encolure ronde
English :	Crew neck sweatshirt
Nederlands :	Sweater met ronde hals
Deutsch :	Rundhals sweatshirt
Español :	Sudadera cuello redondo
Italiano :	Felpa girocollo
Português :	Sweatshirt com decote redondo

CARE LABEL

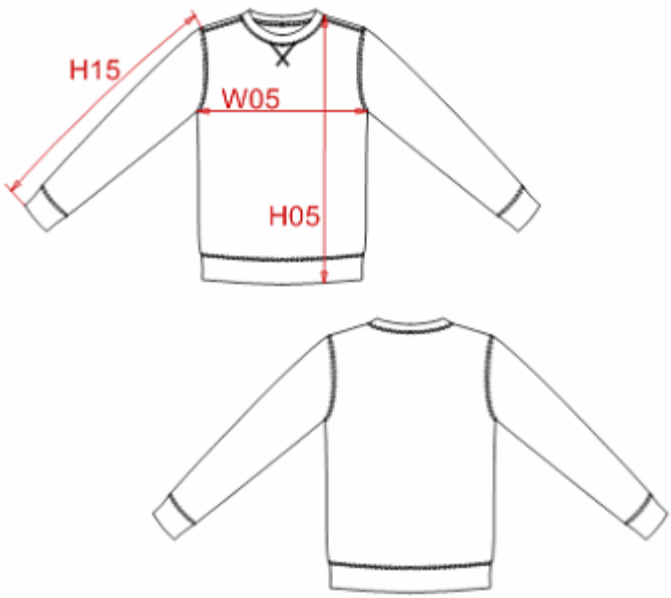

MEASUREMENT

Description	XS	S	M	L	XL	2XL	3XL	4XL		
H05 Hauteur totale avec BC / Total height with rib	67,50	69,50	71,50	73,50	75,50	77,50	80,25	83		
W051/2 largeur poitrine / 1/2 chest width	51	54	57	60	63	66	70	74		
H15 Longueur manche avec BC / Sleeve length with rib	63	65	67	69	71	73	75	77		

PACKING

Box	20 pcs / box XS => L:55cm W:37.8cm H:36cm GW:10.45kg NW:8.80kg S => L:55cm W:37.8cm H:36cm GW:10.95kg NW:9.30kg M => L:55cm W:37.8cm H:36cm GW:11.65kg NW:10.00kg L => L:60cm W:37.8cm H:36cm GW:12.40kg NW:10.75kg XL => L:60cm W:37.8cm H:36cm GW:13.15kg NW:11.50kg XXL => L:68cm W:37.8cm H:36cm GW:14.25kg NW:12.60kg 3XL => L:68cm W:37.8cm H:36cm GW:15.25kg NW:13.60kg 4XL => L:68cm W:37.8cm H:36cm GW:16.00kg NW:14.35kg

REFERENCE : K443

NAME :

SIZES : XS_S_M_L_XL_XXL_3XL_4XL

COMPOSITION :

Main fabric : Brushed Cotton / Polyester fleece 360
80%cotton / 20%polyester
Fabric 2 : Single jersey Cotton/Viscose - 155 100% Cotton
for Middle grey fabric 90%cotton / 10%viscose

WEIGHT :

Main fabric : 360 gsm
Fabric 2 : 155 gsm

FABRIC CONSTRUCTION AND FINISHING :

28/1's 75D & 10/1's - 20GG Low shrinkage / Silicon finish

COLORS	PANTONE SERIGRAPHIE
White	White
Black	Black
Navy	296C
Red	186C
Dark grey	432C
Light royal blue	2935C
Oxford grey	Cool gray 6C
Dark khaki	418C

DESCRIPTION

Français :	Sweat-shirt capuche
English :	Hooded sweatshirt
Nederlands :	Sweater met capuchon
Deutsch :	Sweatshirt mit kapuze
Español :	Sudadera con capucha
Italiano :	Felpa con cappuccio
Português :	Sweatshirt com capuz

CARE LABEL

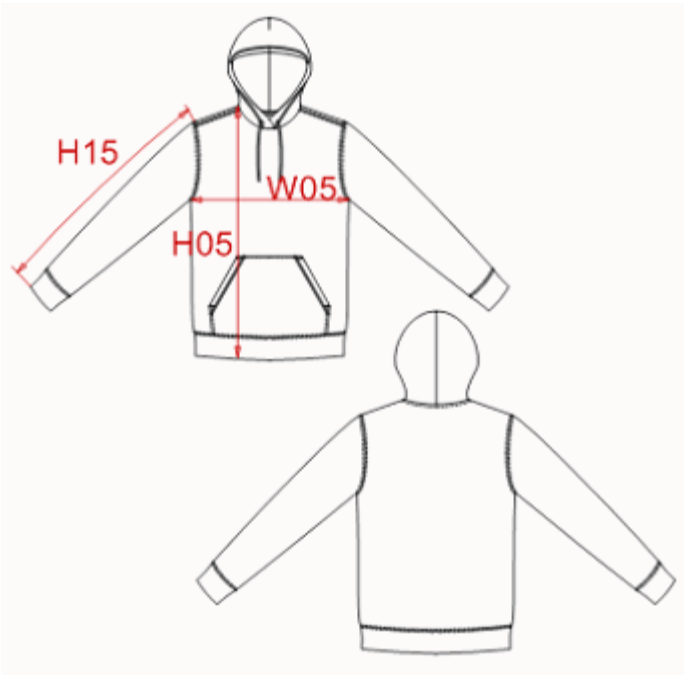

MEASUREMENT

Description	XS	S	M	L	XL	2XL	3XL	4XL		
H05 Hauteur totale avec BC / Total height with rib	67,50	69,50	71,50	73,50	75,50	77,50	80,25	83		
W051/2 largeur poitrine / 1/2 chest width	51	54	57	60	63	66	70	74		
H15 Longueur manche avec BC / Sleeve length with rib	63	65	67	69	71	73	75	77		

PACKING

Box	20 pcs / box XS => L:55cm W:37.8cm H:60cm GW:12.90kg NW:11.10kg S => L:55cm W:37.8cm H:60cm GW:13.95kg NW:12.15kg M => L:55cm W:37.8cm H:60cm GW:14.80kg NW:13.00kg L => L:60cm W:37.8cm H:61cm GW:15.05kg NW:13.25kg XL => L:60cm W:37.8cm H:61cm GW:16.05kg NW:14.25kg XXL => L:68cm W:37.8cm H:65cm GW:17.20kg NW:15.40kg 3XL => L:68cm W:37.8cm H:65cm GW:18.40kg NW:16.60kg 4XL => L:68cm W:37.8cm H:65cm GW:19.20kg NW:17.40kg

KARIBAN

REFERENCE : K444

NAME :

SIZES : XS_S_M_L_XL_XXL_3XL_4XL

COMPOSITION :

Main fabric : Brushed Cotton / Polyester fleece 360
80%cotton / 20%polyester
Fabric 2 : Single jersey Cotton/Viscose - 155 100% Cotton
for Middle grey fabric 90%cotton / 10%viscose

WEIGHT :

Main fabric : 360 gsm
Fabric 2 : 155 gsm

FABRIC CONSTRUCTION AND FINISHING :

28/1's 75D & 10/1's - 20GG Low shrinkage / Silicon finish

COLORS	PANTONE SERIGRAPHIE
White	White
Black	Black
Navy	296C
Red	186C
Dark grey	432C
Light royal blue	2935C
Oxford grey	Cool gray 6C
Dark khaki	418C

DESCRIPTION

Français :	Sweat-shirt zippé capuche
English :	Zip hooded sweatshirt
Nederlands :	Sweater met capuchon en rits
Deutsch :	Sweatshirt-jacke mit kapuze
Español :	Sudadera con capucha y cremallera
Italiano :	Felpa con cappuccio e zip
Português :	Sweatshirt com fecho inteiro e capuz

CARE LABEL

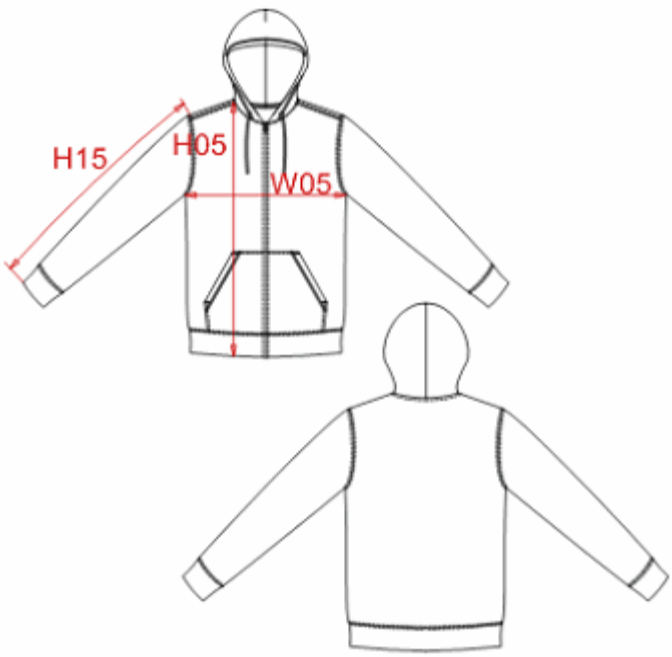

MEASUREMENT

Description	XS	S	M	L	XL	2XL	3XL	4XL		
H05 Hauteur totale avec BC / Total height with rib	67,50	69,50	71,50	73,50	75,50	77,50	80,25	83		
W051/2 largeur poitrine / 1/2 chest width	51	54	57	60	63	66	70	74		
H15 Longueur manche avec BC / Sleeve length with rib	63	65	67	69	71	73	75	77		

PACKING

Box	20 pcs / box XS => L:55cm W:37.8cm H:60cm GW:13.95kg NW:12.15kg S => L:55cm W:37.8cm H:60cm GW:14.55kg NW:12.75kg M => L:55cm W:37.8cm H:60cm GW:15.45kg NW:13.65kg L => L:60cm W:37.8cm H:61cm GW:16.00kg NW:14.20kg XL => L:60cm W:37.8cm H:61cm GW:16.90kg NW:15.10kg XXL => L:68cm W:37.8cm H:65cm GW:17.90kg NW:16.10kg 3XL => L:68cm W:37.8cm H:65cm GW:18.60kg NW:16.80kg 4XL => L:68cm W:37.8cm H:65cm GW:19.90kg NW:18.10kg

textex.de

KARIBAN

REFERENCE : K445

NAME :

SIZES : S_M_L_XL_XXL_3XL_4XL

COMPOSITION :

Main fabric : Brushed Cotton / Polyester fleece 300
80%cotton / 20%polyester

WEIGHT :

Main fabric : 300 gsm

COLORS	PANTONE SERIGRAPHIE
White	White
Black	Black
Navy	296C
Light royal blue	2935C
Forest green	553C
Oxford grey	Cool gray 6C

DESCRIPTION

Français :	Sweat-shirt col zippé
English :	Zip neck sweatshirt
Nederlands :	Sweater met ritskraag
Deutsch :	Sweatshirt mit ¼ reißverschluss
Español :	Sudadera cuello con cremallera
Italiano :	Felpa collo con zip
Português :	Sweatshirt com meio fecho

MEASUREMENT

Description	S	M	L	XL	2XL	3XL	4XL
H05 Hauteur totale avec BC / Total height with rib	70,50	72,50	74,50	76,50	78,50	81,25	84
W05 1/2 largeur poitrine / 1/2 chest width	54	57	60	63	66	70	74
H15 Longueur manche avec BC / Sleeve length with rib	77	79,50	82	84,50	87	89,75	92,50

PACKING

Box	20 pcs / box S => L:55cm W:37.8cm H:36cm GW:9.95kg NW:8.30kg M => L:55cm W:37.8cm H:36cm GW:10.55kg NW:8.90kg L => L:60cm W:37.8cm H:36cm GW:11.10kg NW:9.45kg XL => L:60cm W:37.8cm H:36cm GW:12.00kg NW:10.20kg XXL => L:68cm W:37.8cm H:36cm GW:12.75kg NW:10.95kg 3XL => L:68cm W:37.8cm H:36cm GW:13.15kg NW:11.35kg 4XL => L:68cm W:37.8cm H:36cm GW:13.75kg NW:11.95kg

CARE LABEL

deeter.de

KARIBAN

REFERENCE : K529

NAME :

SIZES : S_M_L_XL_XXL_3XL

COMPOSITION :

Main fabric : Cotton / Elastane 140 97%cotton / 3%elastane

COLORS	PANTONE SERIGRAPHIE
White	White
Black	Black
Light blue	544C
Zinc	447C

WEIGHT :

Main fabric : 140gsm

DESCRIPTION

Français :	Chemise homme manches longues
English :	Men's long sleeve easy care stretch shirt
Nederlands :	Heren overhemd met lange mouwen
Deutsch :	Pflegeleichtes herren langarm stretch-hemd
Español :	Camisa de manga larga
Italiano :	Camicia uomo maniche lunghe
Português :	Camisa de homem de manga comprida com strech e de tratamento fácil

MEASUREMENT

Description	S	M	L	XL	2XL	3XL	
W01 Longueur encolure / Neckline lenght	41,50	42,75	44	45,25	46,50	48,15	
W05 1/2 largeur poitrine / 1/2 chest width	51	54	57	60	63	66	
H15 Longueur manche sans poignet / Sleeve length without cuff	57	58,50	60	62	64	66	
H05 Hauteur totale dos / Back total height	76,30	78,30	80,30	82,30	84,30	86,30	

PACKING

Box	12 pcs / box S => L:56cm W:37cm H:20cm GW:5.00kg NW:3.20kg M => L:56cm W:37cm H:20cm GW:5.10kg NW:3.30kg L => L:56cm W:37cm H:20cm GW:5.30kg NW:3.50kg XL => L:56cm W:37cm H:20cm GW:5.50kg NW:3.70kg XXL => L:56cm W:37cm H:20cm GW:5.70kg NW:3.90kg 3XL => L:56cm W:37cm H:20cm GW:6.00kg NW:4.20kg

CARE LABEL

KARIBAN

REFERENCE : K530

NAME :

SIZES : XS_S_M_L_XL_XXL

COMPOSITION :

Main fabric : Cotton / Elastane 140 97%cotton / 3%elastane

COLORS	PANTONE SERIGRAPHIE
White	White
Black	Black
Zinc	447C
Light blue	544C

WEIGHT :

Main fabric : 140gsm

DESCRIPTION

Français :	Chemise femme manches longues
English :	Ladies long sleeve easy care stretch shirt
Nederlands :	Dames blouse met lange mouwen
Deutsch :	Pflegeleichte damen langarm stretch-bluse
Español :	Camisa de manga larga para mujer
Italiano :	Camicia donna a maniche lunghe
Português :	Camisa de senhora manga comprida de tratamento fácil

MEASUREMENT

Description	XS	S	M	L	XL	2XL	
W05 1/2 largeur poitrine / 1/2 chest width	44	46	48	50,50	53	55,50	
H15 Longueur manche / Sleeve length	54	55	56	57,10	58,25	59,35	
H05 Hauteur totale / Total height	63,80	65,35	66,85	68,75	70,60	72,50	

PACKING

Box	12 pcs / box XS => L:52cm W:34cm H:20cm GW:3.80kg NW:2.50kg S => L:52cm W:34cm H:20cm GW:4.00kg NW:2.70kg M => L:52cm W:34cm H:20cm GW:4.20kg NW:2.90kg L => L:52cm W:34cm H:20cm GW:4.30kg NW:3.00kg XL => L:52cm W:34cm H:20cm GW:4.40kg NW:3.10kg XXL => L:52cm W:34cm H:20cm GW:4.50kg NW:3.20kg

CARE LABEL

deeteX.de

KARIBAN

REFERENCE : K531

NAME :

SIZES : S_M_L_XL_XXL_3XL

COMPOSITION :

Main fabric : Cotton / Elastane 140 97%cotton / 3%elastane

COLORS	PANTONE SERIGRAPHIE
White	White
Black	Black
Zinc	447C
Light blue	544C

WEIGHT :

Main fabric : 140gsm

DESCRIPTION

Français :	Chemise homme manches courtes
English :	Men's short sleeve easy care stretch shirt
Nederlands :	Heren overhemd met korte mouwen
Deutsch :	Pflegeleichtes herren kurzarm stretch-hemd
Español :	Camisa de manga corta
Italiano :	Camicia uomo maniche corte
Português :	Camisa de manga curta em strech e tratamento fácil

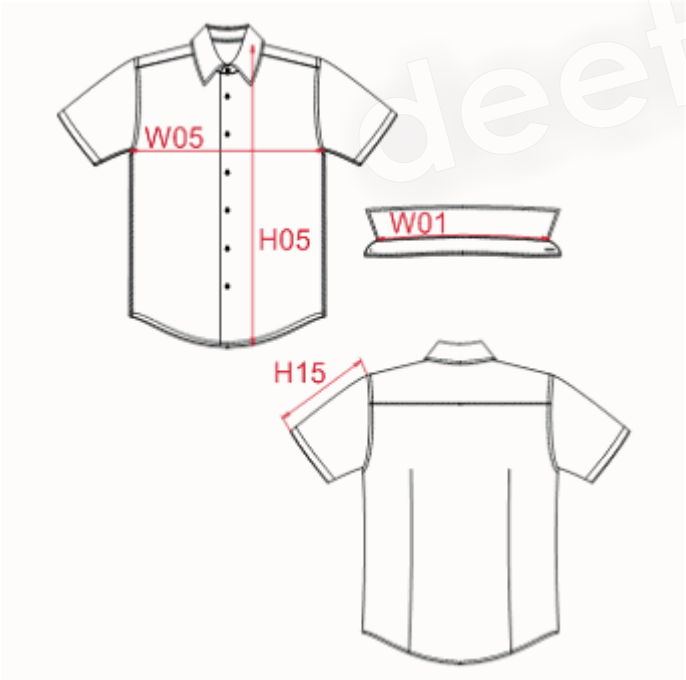

MEASUREMENT

Description	S	M	L	XL	2XL	3XL	
W01 Longueur encolure / Neckline lenght	41,50	42,75	44	45,25	46,50	48,15	
W05 1/2 largeur poitrine / 1/2 chest width	51	54	57	60	63	66	
H15 Longueur manche / Sleeve length	23,50	24,50	25,50	26,50	27,50	28,50	
H05 Hauteur totale dos / Back total height	76,30	78,30	80,30	82,30	84,30	86,30	

PACKING

Box	12 pcs / box S => L:56cm W:37cm H:20cm GW:4.40kg NW:2.60kg M => L:56cm W:37cm H:20cm GW:4.50kg NW:2.70kg L => L:56cm W:37cm H:20cm GW:4.70kg NW:2.90kg XL => L:56cm W:37cm H:20cm GW:5.00kg NW:3.20kg XXL => L:56cm W:37cm H:20cm GW:5.10kg NW:3.30kg 3XL => L:56cm W:37cm H:20cm GW:5.20kg NW:3.40kg

CARE LABEL

KARIBAN

REFERENCE : K532

NAME :

SIZES : XS_S_M_L_XL_XXL

COMPOSITION :

Main fabric : Cotton / Elastane 140 97%cotton / 3%elastane

COLORS	PANTONE SERIGRAPHIE
White	White
Black	Black
Zinc	447C
Light blue	544C

WEIGHT :

Main fabric : 140gsm

DESCRIPTION

Français :	Chemise femme manches courtes
English :	Ladies short sleeve easy care stretch shirt
Nederlands :	Dames blouse met korte mouwen
Deutsch :	Pflegeleichte damen kurzarm stretch-bluse
Español :	Camisa de manga corta para mujer
Italiano :	Camicia donna maniche corte
Português :	Camisa de senhora manga curta em strech e tratamento fácil

MEASUREMENT

Description	XS	S	M	L	XL	2XL	
W05 1/2 largeur poitrine / 1/2 chest width	44	46	48	50,50	53	55,50	
H15 Longueur manche / Sleeve length	14	15	16	17,10	18,25	19,35	
H05 Hauteur totale / Total height	63,80	65,35	66,85	68,75	70,60	72,50	

PACKING

Box	12 pcs / box XS => L:52cm W:34cm H:20cm GW:3.00kg NW:1.70kg S => L:52cm W:34cm H:20cm GW:3.20kg NW:1.90kg M => L:52cm W:34cm H:20cm GW:3.40kg NW:2.10kg L => L:52cm W:34cm H:20cm GW:3.60kg NW:2.30kg XL => L:52cm W:34cm H:20cm GW:3.80kg NW:2.50kg XXL => L:52cm W:34cm H:20cm GW:4.00kg NW:2.70kg

CARE LABEL

beetex.de

KARIBAN

REFERENCE : K533

NAME :

SIZES : S_M_L_XL_XXL_3XL_4XL_5XL_6XL

COLORS	PANTONE SERIGRAPHIE
White	White
Oxford blue	657C
Oxford silver	Cool gray 9C

COMPOSITION :

Main fabric : Oxford cotton / Polyester - 130 For white color
70%oxford cotton / 30%polyester
Main fabric : Oxford cotton / Polyester - 135 For colors
70%oxford cotton / 30%polyester

WEIGHT :

Main fabric : 130 gsm
Main fabric : 135gsm

FABRIC CONSTRUCTION AND FINISHING :

Resin coating for easier ironing

DESCRIPTION

Français :	Chemise homme manches longues
English :	Men's long sleeve easy care oxford shirt
Nederlands :	Heren overhemd met lange mouwen
Deutsch :	Pflegeleichtes herren langarm oxford-hemd
Español :	Camisa de manga larga
Italiano :	Camicia oxford uomo maniche lunghe
Português :	Camisa manga comprida em oxford de tratamento fácil

CARE LABEL

MEASUREMENT

Description	S	M	L	XL	2XL	3XL	4XL	5XL	6XL
W01 Longueur encolure / Neckline lenght	41,25	42,50	43,75	45	46,25	47,90	49,50	51,20	52,80
W051/2 largeur poitrine / 1/2 chest width	54	57	60	63	66	69	72	75	78
H15 Longueur manche sans poignet / Sleeve length without cuff	57,50	59,50	61,50	63,50	65,50	67,50	69,50	71,50	73,50
H05 Hauteur totale dos / Back total height	78	80	82	84	86	88	90	92	94

PACKING

Box	12 pcs / box S => L:56 W:37 H:23cm GW:5kg NW:3.4kg M => L:56 W:37 H:23cm GW:5.1kg NW:3.5kg L => L:56 W:37 H:23cm GW:5.20kg NW:3.60kg XL => L:56 W:37 H:23cm GW:5.3kg NW:3.7kg XXL => L:56 W:37 H:23cm GW:5.4kg NW:3.8kg 3XL => L:56 W:37 H:23cm GW:5.50kg NW:3.90kg 4XL => L:56 W:37 H:23cm GW:5.60kg NW:4.00kg 5XL => L:56 W:37 H:23cm GW:5.7kg NW:4.1kg 6XL => L:56 W:37 H:23cm GW:5.8kg NW:4.2kg

KARIBAN

REFERENCE : K534

NAME :

SIZES : XS_S_M_L_XL_XXL_3XL_4XL

COLORS	PANTONE SERIGRAPHIE
White	White
Oxford silver	Cool gray 9C
Oxford blue	657C

COMPOSITION :

Main fabric : Oxford cotton / Polyester - 130 103x45CVC 45xc16 with Wrinkle free finish
For white color 70%oxford cotton / 30%polyester
Main fabric : Oxford cotton / Polyester - 135 103x45CVC 45xc16 with Wrinkle free finish
For colours 70%oxford cotton / 30%polyester

WEIGHT :

Main fabric : 130 gsm
Main fabric : 135gsm

FABRIC CONSTRUCTION AND FINISHING :

Resin coating for easier ironing

DESCRIPTION

Français :	Chemise femme manches longues
English :	Ladies long sleeve easy care oxford shirt
Nederlands :	Dames blouse met lange mouwen
Deutsch :	Pflegeleichte damen langarm oxford-bluse
Español :	Camisa de manga larga para mujer
Italiano :	Camicia oxford donna maniche lunghe
Português :	Camisa de senhora manga comprida em oxford de tratamento fácil

CARE LABEL

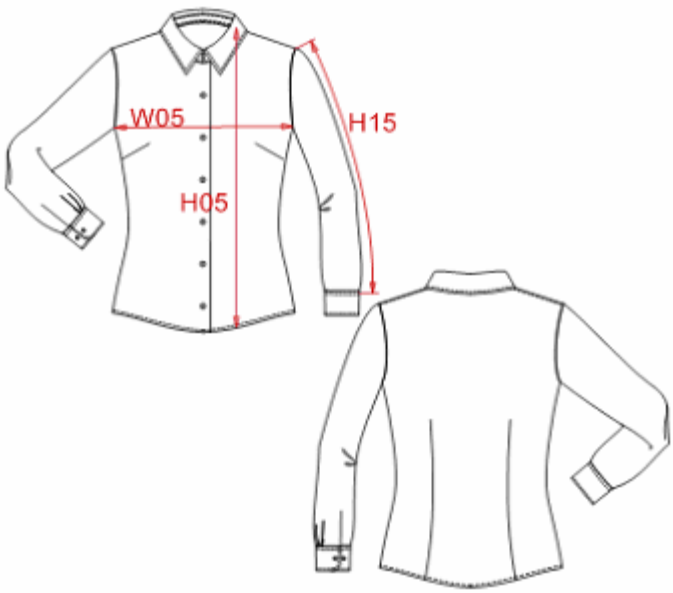

MEASUREMENT

Description	XS	S	M	L	XL	2XL	3XL	4XL		
W051/2 largeur poitrine / 1/2 chest width	46	48	50	53	56	59	62	65		
H15 Longueur manche / Sleeve length	54	55	56	57,10	58,25	59,35	60,50	61,60		
H05 Hauteur totale / Total height	62,75	64,30	65,85	67,75	69,70	71,65	73,55	75,50		

PACKING

Box	12 pcs / box XS => L:52cm W:34cm H:20cm GW:4.00kg NW:2.60kg S => L:52cm W:34cm H:20cm GW:4.10kg NW:2.70kg M => L:52cm W:34cm H:20cm GW:4.20kg NW:2.80kg L => L:52cm W:34cm H:20cm GW:4.30kg NW:2.90kg XL => L:52cm W:34cm H:20cm GW:4.40kg NW:3.00kg XXL => L:52cm W:34cm H:20cm GW:4.50kg NW:3.10kg 3XL => L:52cm W:34cm H:20cm GW:4.60kg NW:3.20kg 4XL => L:52cm W:34cm H:20cm GW:4.70kg NW:3.30kg

fleetex.de

KARIBAN

REFERENCE : K535

NAME :

SIZES : S_M_L_XL_XXL_3XL_4XL_5XL_6XL

COLORS	PANTONE SERIGRAPHIE
White	White
Oxford silver	Cool gray 9C
Oxford blue	657C

COMPOSITION :

Main fabric : Oxford cotton / Polyester - 130 For white color
70%oxford cotton / 30%polyester
Main fabric : Oxford cotton / Polyester - 135 For colors
70%oxford cotton / 30%polyester

WEIGHT :

Main fabric : 130 gsm
Main fabric : 135gsm

FABRIC CONSTRUCTION AND FINISHING :

Resin coating for easier ironing

DESCRIPTION

Français :	Chemise homme manches courtes
English :	Men's short sleeve easy care oxford shirt
Nederlands :	Heren overhemd met korte mouwen
Deutsch :	Pflegeleichtes herren kurzarm oxford-hemd
Español :	Camisa de manga corta
Italiano :	Camicia oxford uomo maniche corte
Português :	Camisa manga curta em oxford de tratamento fácil

CARE LABEL

MEASUREMENT

Description	S	M	L	XL	2XL	3XL	4XL	5XL	6XL
W01 Longueur encolure / Neckline lenght	41,25	42,50	43,75	45	46,25	47,90	49,50	51,20	52,80
W051/2 largeur poitrine / 1/2 chest width	54	57	60	63	66	69	72	75	78
H15 Longueur manche / Sleeve length	24	25	26	27	28	29	30	31	32
H05 Hauteur totale dos / Back total height	78	80	82	84	86	88	90	92	94

PACKING

Box	12 pcs / box S => L:56cm W:37cm H:23cm GW:4.90kg NW:3.40kg M => L:56cm W:37cm H:23cm GW:5.00kg NW:3.50kg L => L:56cm W:37cm H:23cm GW:5.10kg NW:3.60kg XL => L:56cm W:37cm H:23cm GW:5.20kg NW:3.70kg XXL => L:56cm W:37cm H:23cm GW:5.30kg NW:3.80kg 3XL => L:56cm W:37cm H:23cm GW:5.40kg NW:3.90kg 4XL => L:56cm W:37cm H:23cm GW:5.30kg NW:3.80kg 5XL => L:56cm W:37cm H:23cm GW:5.40kg NW:3.90kg 6XL => L:56cm W:37cm H:23cm GW:5.50kg NW:4.00kg

REFERENCE : K536

NAME :

SIZES : XS_S_M_L_XL_XXL_3XL_4XL

COLORS	PANTONE SERIGRAPHIE
White	White
Oxford silver	Cool gray 9C
Oxford blue	657C

COMPOSITION :

Main fabric : Oxford cotton / Polyester - 130 For white color
70%oxford cotton / 30%polyester
Main fabric : Oxford cotton / Polyester - 135 For colors
70%oxford cotton / 30%polyester

WEIGHT :

Main fabric : 130 gsm
Main fabric : 135gsm

FABRIC CONSTRUCTION AND FINISHING :

Resin coating for easier ironing

DESCRIPTION

Français :	Chemise femme manches courtes
English :	Ladies short sleeve easy care oxford shirt
Nederlands :	Dames blouse met korte mouwen
Deutsch :	Pflegeleichte damen kurzarm oxford-bluse
Español :	Camisa de manga corta para mujer
Italiano :	Camicia oxford donna a maniche corte
Português :	Camisa de senhora manga curta em oxford tratamento fácil

CARE LABEL

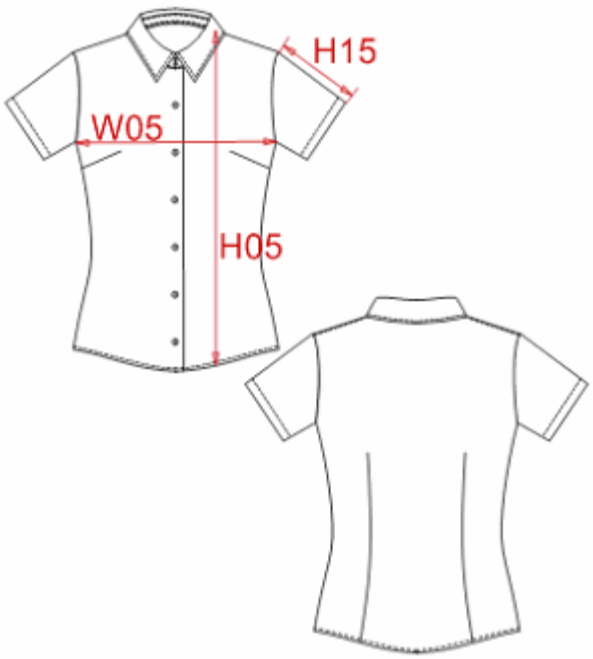

MEASUREMENT

Description	XS	S	M	L	XL	2XL	3XL	4XL		
W051/2 largeur poitrine / 1/2 chest width	46	48	50	53	56	59	62	65		
H15 Longueur manche / Sleeve length	18,50	19,50	20,50	21,60	22,75	23,85	25	26,10		
H05 Hauteur totale dos / Back total height	62,75	64,30	65,85	67,75	69,70	71,65	73,55	75,50		

PACKING

Box	12 pcs / box XS => L:52cm W:34cm H:20cm GW:3.60kg NW:2.30kg S => L:52cm W:34cm H:20cm GW:3.70kg NW:2.40kg M => L:52cm W:34cm H:20cm GW:3.80kg NW:2.50kg L => L:52cm W:34cm H:20cm GW:3.90kg NW:2.60kg XL => L:52cm W:34cm H:20cm GW:4.00kg NW:2.70kg XXL => L:52cm W:34cm H:20cm GW:4.10kg NW:2.70kg 3XL => L:52cm W:34cm H:20cm GW:4.20kg NW:2.80kg 4XL => L:52cm W:34cm H:20cm GW:4.30kg NW:2.90kg

KARIBAN

REFERENCE : K537

NAME :

SIZES : S_M_L_XL_XXL_3XL_4XL

COMPOSITION :

Main fabric : Cotton micro twill 120 100%cotton

COLORS	PANTONE SERIGRAPHIE
White	White
Black	Black
Zinc	447C
Bright sky	2708C

WEIGHT :

Main fabric : 120 gsm

FABRIC CONSTRUCTION AND FINISHING :

Special finish which ensures a crease free shirt Non Iron / Fully taped

DESCRIPTION

Français :	Chemise homme manches longues
English :	Men's long sleeve supreme non iron shirt
Nederlands :	Heren overhemd met lange mouwen
Deutsch :	Bügelfreies herren langarm hemd
Español :	Camisa de manga larga
Italiano :	Camicia uomo maniche lunghe
Português :	Camisa manga comprida supreme - Não precisa passar a ferro

CARE LABEL

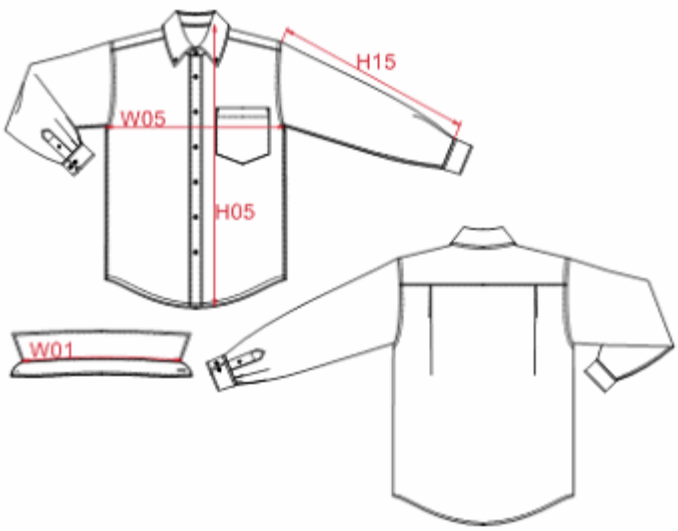

MEASUREMENT

Description	S	M	L	XL	2XL	3XL	4XL
W01 Longueur encolure / Neckline lenght	41,25	42,50	43,75	45	46,25	47,90	49,50
W05 1/2 largeur poitrine / 1/2 chest width	54	57	60	63	66	69	72
H15 Longueur manche sans poignet / Sleeve length without cuff	56,50	58,50	60,50	62,50	64,50	66,50	68,50
H05 Hauteur totale dos / Back total height	78	80	82	84	86	88	90,05

PACKING

Box	12 pcs / box S => L:56cm W:37cm H:23cm GW:4.90kg NW:3.40kg M => L:56cm W:37cm H:23cm GW:5.00kg NW:3.50kg L => L:56cm W:37cm H:23cm GW:5.10kg NW:3.60kg XL => L:56cm W:37cm H:23cm GW:5.20kg NW:3.70kg XXL => L:56cm W:37cm H:23cm GW:5.30kg NW:3.80kg 3XL => L:56cm W:37cm H:23cm GW:5.40kg NW:3.90kg 4XL => L:56cm W:37cm H:23cm GW:5.50kg NW:4.00kg

peelex.de

KARIBAN

REFERENCE : K537-ELS

NAME :

SIZES : S_M_L_XL_XXL_3XL_4XL

COMPOSITION :

Main fabric : Cotton micro twill 120 100%cotton

COLORS	PANTONE SERIGRAPHIE
White	White
Black	Black
Zinc	447C
Bright sky	2708C

WEIGHT :

Main fabric : 120 gsm

FABRIC CONSTRUCTION AND FINISHING :

Special finish which ensures a crease free shirt Non Iron / Fully taped

DESCRIPTION

Français :	Chemise homme manches extra longues
English :	Men's extra long sleeve supreme non iron shirt
Nederlands :	Heren overhemd met extra lange mouwen
Deutsch :	Bügelfreies herren langarm hemd
Español :	Camisa de manga extra larga
Italiano :	Camicia uomo maniche extra lunghe
Português :	Camisa manga comprida supreme - Não precisa pasar a ferro

CARE LABEL

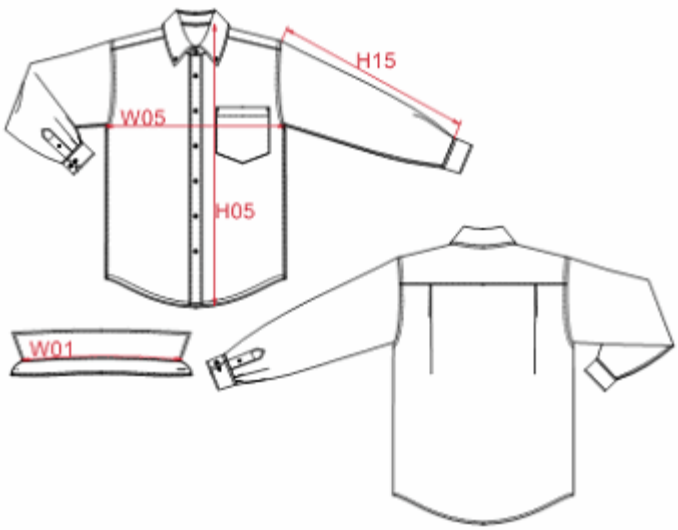

MEASUREMENT

Description	S	M	L	XL	2XL	3XL	4XL
W01 Longueur encolure / Neckline lenght	41,25	42,50	43,75	45	46,25	47,90	49,50
W05 1/2 largeur poitrine / 1/2 chest width	54	57	60	63	66	69	72
H15 Longueur manche sans poignet / Sleeve length without cuff	59,50	61,50	63,50	66,50	68,50	71,50	73,50
H05 Hauteur totale dos / Back total height	78	80	82	84	86	88	90,05

PACKING

Box	12 pcs / box S => L:56cm W:37cm H:23cm GW:4.90kg NW:3.40kg M => L:56cm W:37cm H:23cm GW:5.00kg NW:3.50kg L => L:56cm W:37cm H:23cm GW:5.10kg NW:3.60kg XL => L:56cm W:37cm H:23cm GW:5.20kg NW:3.70kg XXL => L:56cm W:37cm H:23cm GW:5.30kg NW:3.80kg 3XL => L:56cm W:37cm H:23cm GW:5.40kg NW:3.90kg 4XL => L:56cm W:37cm H:23cm GW:5.50kg NW:4.00kg

REFERENCE : K538

NAME :

SIZES : XS_S_M_L_XL_XXL_3XL_4XL

COMPOSITION :

Main fabric : Cotton micro twill 120 100%cotton

COLORS	PANTONE SERIGRAPHIE
White	White
Black	Black
Zinc	447C
Bright sky	2708C

WEIGHT :

Main fabric : 120 gsm

FABRIC CONSTRUCTION AND FINISHING :

Special finish which ensures a crease free shirt Non Iron / Fully taped

DESCRIPTION

Français :	Chemise femme manches longues
English :	Ladies long sleeve supreme non iron shirt
Nederlands :	Dames blouse met lange mouwen
Deutsch :	Bügelfreie damen langarm bluse
Español :	Camisa de manga larga para mujer
Italiano :	Camicia donna maniche lunghe
Português :	Camisa de senhora de manga comprida supreme - Não precisa passar a ferro

CARE LABEL

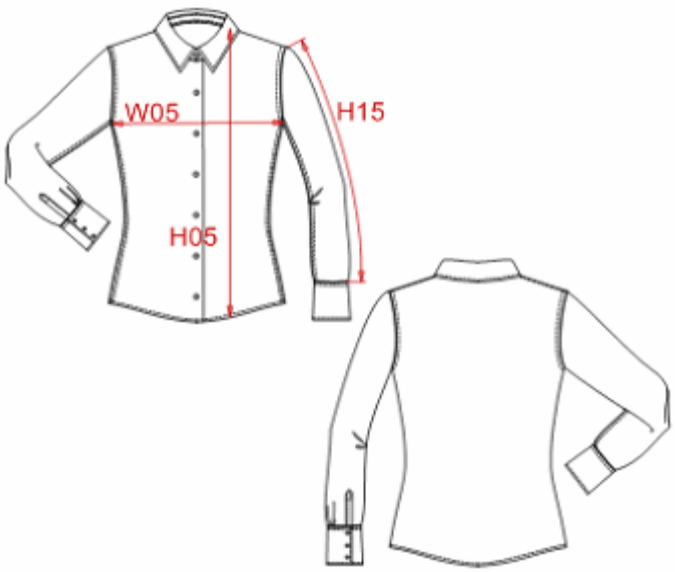

MEASUREMENT

Description	XS	S	M	L	XL	2XL	3XL	4XL		
H05 Hauteur totale devant / Front total height	63,70	65,25	66,80	68,75	70,70	72,65	74,55	76,50		
W051/2 largeur poitrine / 1/2 chest width	46	48	50	53	56	59	62	65		
H15 Longueur manche sans poignet / Sleeve length without cuff	49	50	51	52,10	53,25	54,35	55,50	56,60		

PACKING

Box	12 pcs / box XS => L:52cm W:34cm H:20cm GW:3.80kg NW:2.50kg S => L:52cm W:34cm H:20cm GW:3.90kg NW:2.60kg M => L:52cm W:34cm H:20cm GW:4.00kg NW:2.70kg L => L:52cm W:34cm H:20cm GW:4.10kg NW:2.80kg XL => L:52cm W:34cm H:20cm GW:4.20kg NW:2.90kg XXL => L:52cm W:34cm H:20cm GW:4.30kg NW:3.00kg 3XL => L:52cm W:34cm H:20cm GW:4.40kg NW:3.10kg 4XL => L:52cm W:34cm H:20cm GW:4.50kg NW:3.20kg

KARIBAN

REFERENCE : K539

NAME :

SIZES : S_M_L_XL_XXL_3XL_4XL

COMPOSITION :

Main fabric : Cotton micro twill 120 100%cotton

COLORS	PANTONE SERIGRAPHIE
White	White
Black	Black
Zinc	447C
Bright sky	2708C

WEIGHT :

Main fabric : 120 gsm

FABRIC CONSTRUCTION AND FINISHING :

Special finish which ensures a crease free shirt Non Iron / Fully taped

DESCRIPTION

Français :	Chemise homme manches courtes
English :	Men's short sleeve supreme non iron shirt
Nederlands :	Heren overhemd met korte mouwen
Deutsch :	Bügelfreies herren kurzarm hemd
Español :	Camisa de manga corta
Italiano :	Camicia uomo maniche corte
Português :	Camisa manga curta supreme - Não precisa passar a ferro

CARE LABEL

MEASUREMENT

Description	S	M	L	XL	2XL	3XL	4XL
W01 Longueur encolure / Neckline lenght	41,25	42,50	43,75	45	46,25	47,85	49,55
W05 1/2 largeur poitrine / 1/2 chest width	54	57	60	63	66	69	72
H15 Longueur manche / Sleeve length	24	25	26	27	28	29	30
H05 Hauteur totale dos / Back total height	78	80	82	84	86	88	90

PACKING

Box	12 pcs / box S => L:56cm W:37cm H:23cm GW:4.10kg NW:2.60kg M => L:56cm W:37cm H:23cm GW:4.20kg NW:2.70kg L => L:56cm W:37cm H:23cm GW:4.30kg NW:2.80kg XL => L:56cm W:37cm H:23cm GW:4.40kg NW:2.90kg XXL => L:56cm W:37cm H:23cm GW:4.50kg NW:3.00kg 3XL => L:56cm W:37cm H:23cm GW:4.60kg NW:3.10kg 4XL => L:56cm W:37cm H:23cm GW:4.70kg NW:3.20kg

leelex.de

KARIBAN

REFERENCE : K540

NAME :

SIZES : XS_S_M_L_XL_XXL_3XL_4XL

COMPOSITION :

Main fabric : Cotton micro twill 120 100%cotton

COLORS	PANTONE SERIGRAPHIE
White	White
Black	Black
Zinc	447C
Bright sky	2708C

WEIGHT :

Main fabric : 120 gsm

FABRIC CONSTRUCTION AND FINISHING :

Special finish which ensures a crease free shirt Non Iron / Fully taped

DESCRIPTION

Français :	Chemise femme manches courtes
English :	Ladies short sleeve supreme non iron shirt
Nederlands :	Dames blouse korte mouwen
Deutsch :	Bügelfreie damen kurzarm bluse
Español :	Camisa de manga corta para mujer
Italiano :	Camicia donna maniche corte
Português :	Camisa de senhora de manga curta supreme - Não precisa passar a ferro

CARE LABEL

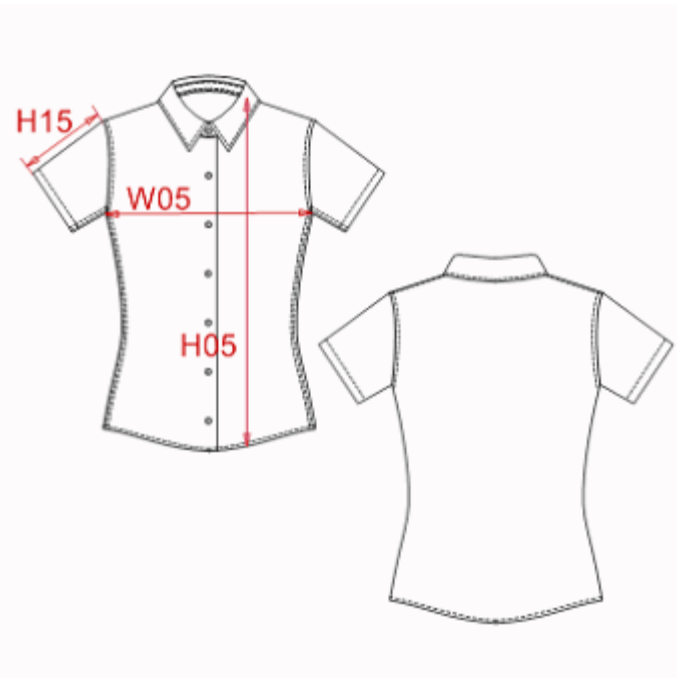

MEASUREMENT

Description	XS	S	M	L	XL	2XL	3XL	4XL		
H05 Hauteur totale devant / Front total height	63,70	65,25	66,80	68,75	70,70	72,65	74,55	76,50		
W051/2 largeur poitrine / 1/2 chest width	46	48	50	53	56	59	62	65		
H15 Longueur manche / Sleeve length	18,50	19,50	20,50	21,60	22,75	23,85	25	26,10		

PACKING

Box	12 pcs / box XS => L:52cm W:34cm H:20cm GW:3.10kg NW:1.80kg S => L:52cm W:34cm H:20cm GW:3.20kg NW:1.90kg M => L:52cm W:34cm H:20cm GW:3.30kg NW:2.00kg L => L:52cm W:34cm H:20cm GW:3.40kg NW:2.10kg XL => L:52cm W:34cm H:20cm GW:3.50kg NW:2.20kg XXL => L:52cm W:34cm H:20cm GW:3.40kg NW:2.10kg 3XL => L:52cm W:34cm H:20cm GW:3.30kg NW:2.00kg 4XL => L:52cm W:34cm H:20cm GW:3.20kg NW:1.90kg

KARIBAN

REFERENCE : K541

NAME :

SIZES : S_M_L_XL_XXL_3XL_4XL_5XL_6XL

COMPOSITION :

Main fabric : Cotton poplin 120 100%cotton
Main fabric : Cotton poplin 125 100%cotton

COLORS	PANTONE SERIGRAPHIE
White	White
Black	Black
Navy	296C
Classic red	200C
Zinc	447C
Bright sky	2708C

WEIGHT :

Main fabric : 120 gsm
Main fabric : 125 gsm

FABRIC CONSTRUCTION AND FINISHING :

Resin coating for easier ironing

DESCRIPTION

Français :	Chemise homme manches longues
English :	Men's long sleeve easy care cotton poplin shirt
Nederlands :	Heren overhemd met lange mouwen
Deutsch :	Pflegeleichtes baumwolle popeline herren langarm hemd
Español :	Camisa de manga larga
Italiano :	Camicia uomo maniche lunghe popeline
Português :	Camisa manga comprida em popeline de tratamento fácil

CARE LABEL

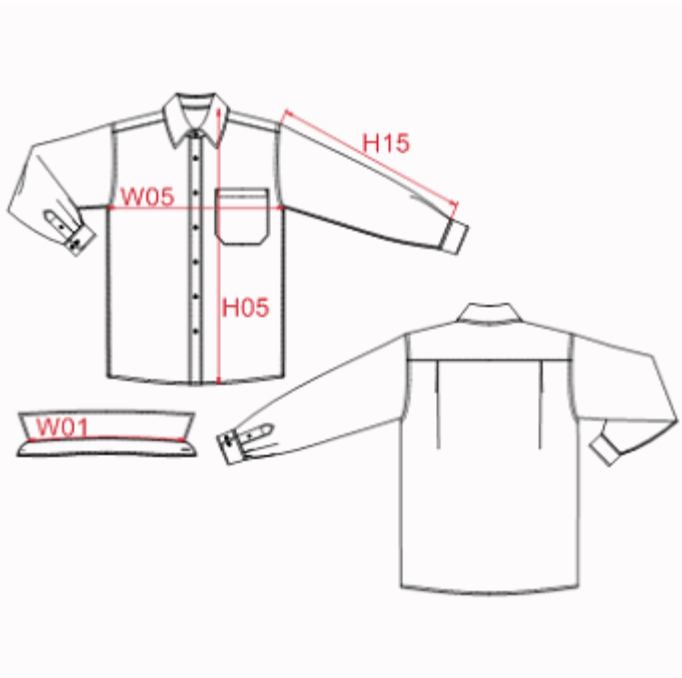

MEASUREMENT

Description	S	M	L	XL	2XL	3XL	4XL	5XL	6XL
W01 Longueur encolure / Neckline lenght	41,25	42,50	43,75	45	46,25	47,90	49,50	51,20	52,80
W051/2 largeur poitrine / 1/2 chest width	54	57	60	63	66	69	72	75	78
H15 Longueur manche sans poignet / Sleeve length without cuff	57,50	59,50	61,50	63,50	65,50	67,50	69,50	71,50	73,50
H05 Hauteur totale dos / Back total height	74,50	76,50	78,50	80,50	82,50	84,50	86,50	88,50	90,50

PACKING

Box	12 pcs / box S => L:56 W:37 H:20cm GW:5.6kg NW:3.8kg M => L:56 W:37 H:20cm GW:5.7kg NW:3.9kg L => L:56 W:37 H:20cm GW:5.8kg NW:4kg XL => L:56 W:37 H:20cm GW:5.9kg NW:4.1kg XXL => L:56 W:37 H:20 GW:6kg NW:4.2kg 3XL => L:56 W:37 H:20cm GW:6.1kg NW:4.3kg 4XL => L:56 W:37 H:20cm GW:6.2kg NW:4.4kg 5XL => L:56 W:37 H:20cm GW:6.3kg NW:4.5kg 6XL => L:56 W:37 H:20cm GW:6.4kg NW:4.6kg

KARIBAN

REFERENCE : K542

NAME :

SIZES : XS_S_M_L_XL_XXL_3XL_4XL

COMPOSITION :

Main fabric : Cotton poplin 120 100%cotton
Main fabric : Cotton poplin 125 100%cotton

COLORS	PANTONE SERIGRAPHIE
White	White
Black	Black
Navy	296C
Classic red	200C
Zinc	447C
Bright sky	2708C

WEIGHT :

Main fabric : 120 gsm
Main fabric : 125 gsm

FABRIC CONSTRUCTION AND FINISHING :

resin coating for easier ironing

DESCRIPTION

Français :	Chemise femme manches longues
English :	Ladies long sleeve easy care cotton poplin shirt
Nederlands :	Dames blouse met lange mouwen
Deutsch :	Pflegeleichte baumwolle popeline damen langarm bluse
Español :	Camisa de manga larga para mujer
Italiano :	Camicia donna maniche lunghe popeline
Português :	Camisa de senhora de manga comprida em popeline tratamento fácil

CARE LABEL

MEASUREMENT

Description	XS	S	M	L	XL	2XL	3XL	4XL		
W051/2 largeur poitrine / 1/2 chest width	46	48	50	53	56	59	62	65		
H15 Longueur manche / Sleeve length	54	55	56	57,10	58,25	59,35	60,50	61,60		
H05 Hauteur totale dos / Back total height	62,60	64,20	65,75	67,70	69,70	71,55	73,45	75,40		

PACKING

Box	12 pcs / box XS => L:52cm W:34cm H:20cm GW:3.60kg NW:2.30kg S => L:52cm W:34cm H:20cm GW:3.70kg NW:2.40kg M => L:52cm W:34cm H:20cm GW:3.80kg NW:2.50kg L => L:52cm W:34cm H:20cm GW:3.90kg NW:2.60kg XL => L:52cm W:34cm H:20cm GW:4.00kg NW:2.70kg XXL => L:52cm W:34cm H:20cm GW:4.10kg NW:2.70kg 3XL => L:52cm W:34cm H:20cm GW:4.20kg NW:2.80kg 4XL => L:52cm W:34cm H:20cm GW:4.30kg NW:2.90kg

KARIBAN

REFERENCE : K543

NAME :

SIZES : S_M_L_XL_XXL_3XL_4XL_5XL_6XL

COMPOSITION :

Main fabric : Cotton poplin 120 100%cotton
Main fabric : Cotton poplin 125 100%cotton

COLORS	PANTONE SERIGRAPHIE
White	White
Black	Black
Navy	296C
Classic red	200C
Zinc	447C
Bright sky	2708C

WEIGHT :

Main fabric : 120 gsm
Main fabric : 125 gsm

FABRIC CONSTRUCTION AND FINISHING :

Resin coating for easier ironing

DESCRIPTION

Français :	Chemise homme manches courtes
English :	Men's short sleeve easy care cotton poplin shirt
Nederlands :	Heren overhemd met korte mouwen
Deutsch :	Pflegeleichtes baumwolle popeline herren kurzarm hemd
Español :	Camisa de manga corta
Italiano :	Camicia uomo a maniche corte popeline
Português :	Camisa de manga curta em popeline tratamento fácil

CARE LABEL

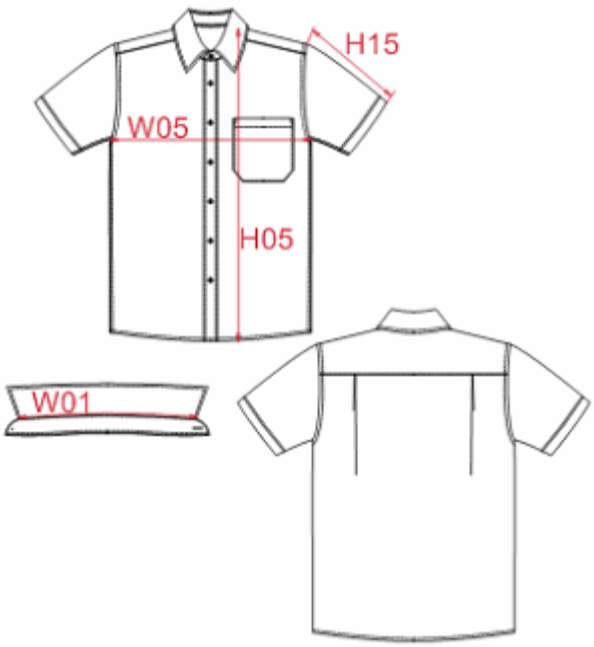

MEASUREMENT

Description	S	M	L	XL	2XL	3XL	4XL	5XL	6XL	
W01 Longueur encolure / Neckline lenght	41,25	42,50	43,75	45	46,25	47,90	49,50	51,20	52,80	
W051/2 largeur poitrine / 1/2 chest width	54	57	60	63	66	69	72	75	78	
H15 Longueur manche / Sleeve length	24	25	26	27	28	29	30	31	32	
H05 Hauteur totale dos / Back total height	74,50	76,50	78,50	80,50	82,50	84,50	86,50	88,50	90,50	

PACKING

Box	12 pcs / box S => L:56 W:37 H:20cm GW:5.1kg NW:3.3kg M => L:56 W:37 H:20cm GW:5.2kg NW:3.4kg L => L:56 W:37 H:20cm GW:5.3kg NW:3.5kg XL => L:56 W:37 H:20cm GW:5.4kg NW:3.6kg XXL => L:56 W:37 H:20cm GW:5.5kg NW:3.7kg 3XL => L:56 W:37 H:20cm GW:5.6kg NW:3.8kg 4XL => L:56 W:37 H:20cm GW:5.7kg NW:3.9kg 5XL => L:56 W:37 H:20cm GW:5.8kg NW:4.0kg 6XL => L:56 W:37 H:20cm GW:5.9kg NW:4.1kg

deelex.de

KARIBAN

REFERENCE : K544

NAME :

SIZES : XS_S_M_L_XL_XXL_3XL_4XL

COMPOSITION :

Main fabric : Cotton poplin 120 100%cotton
Main fabric : Cotton poplin 125 100%cotton

COLORS	PANTONE SERIGRAPHIE
White	White
Black	Black
Navy	296C
Classic red	200C
Zinc	447C
Bright sky	2708C

WEIGHT :

Main fabric : 120 gsm
Main fabric : 125 gsm

FABRIC CONSTRUCTION AND FINISHING :

Resin coating for easier ironing

DESCRIPTION

Français :	Chemise femme manches courtes
English :	Ladies short sleeve easy care cotton poplin shirt
Nederlands :	Dames blouse met korte mouwen
Deutsch :	Pflegeleichte baumwolle popeline damen kurzarm bluse
Español :	Camisa de manga corta para mujer
Italiano :	Camicia donna maniche corte popeline
Português :	Camisa de senhora manga curta em popeline tratamento fácil

CARE LABEL

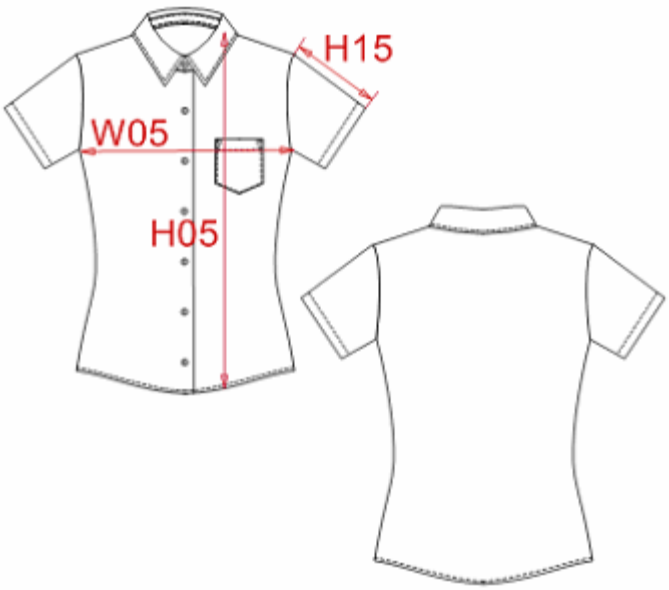

MEASUREMENT

Description	XS	S	M	L	XL	2XL	3XL	4XL		
W051/2 largeur poitrine / 1/2 chest width	46	48	50	53	56	59	62	65		
H15 Longueur manche / Sleeve length	18,50	19,50	20,50	21,60	22,75	23,85	25	26,10		
H05 Hauteur totale dos / Back total height	62,65	64,20	65,75	67,70	69,60	71,55	73,45	75,40		

PACKING

Box	12 pcs / box XS => L:52cm W:34cm H:20cm GW:3.10kg NW:1.80kg S => L:52cm W:34cm H:20cm GW:3.20kg NW:1.90kg M => L:52cm W:34cm H:20cm GW:3.30kg NW:2.00kg L => L:52cm W:34cm H:20cm GW:3.40kg NW:2.10kg XL => L:52cm W:34cm H:20cm GW:3.50kg NW:2.20kg XXL => L:52cm W:34cm H:20cm GW:3.60kg NW:2.30kg 3XL => L:52cm W:34cm H:20cm GW:3.70kg NW:2.40kg 4XL => L:52cm W:34cm H:20cm GW:3.80kg NW:2.50kg

REFERENCE : K545

NAME : JOFREY

SIZES : S_M_L_XL_XXL_3XL_4XL_5XL_6XL

COMPOSITION :

Main fabric : Polycotton poplin 65/35 - 100 110x76 45x45
with Easy Care
For white color 65%polyester / 35%cotton
Main fabric : Polycotton poplin 65/35 - 110 110x76 45x45
with Easy Care
For colors 65%polyester / 35%cotton

WEIGHT :

Main fabric : 100 gsm
Main fabric : 110 gsm

DESCRIPTION

Français :	Chemise homme manches longues
English :	Men's long sleeve easy care polycotton poplin shirt
Nederlands :	Heren overhemd met lange mouwen
Deutsch :	Pflegeleichtes polycotton herren langarm hemd
Español :	Camisa de manga larga
Italiano :	Camicia uomo maniche lunghe policotone popeline
Português :	Camisa manga comprida de tratamento fácil

CARE LABEL

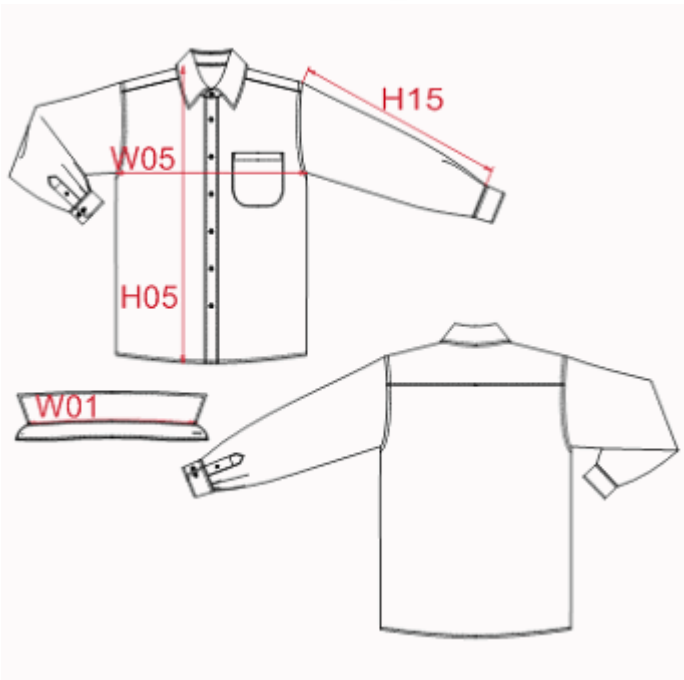

MEASUREMENT

Description	S	M	L	XL	XXL	3XL	4XL	5XL	6XL	
W01 Longueur encolure / Neckline lenght	41,25	42,50	43,75	45	46,25	47,85	49,55	51,15	52,75	
W051/2 largeur poitrine/1/2 chest width	54	57	60	63	66	69	72	75	78	
H15 Longueur manche sans poignet / Sleeve length without cuff	57,50	59,50	61,50	63,50	65,50	67,50	69,50	71,50	73,50	
H05 Hauteur totale dos / Back total height	76	78	80	82	84	86	88	90	92	

PACKING

Box	12 pcs / box S => L:56cm W:37cm H:20cm GW:4.80kg NW:3.20kg M => L:56cm W:37cm H:20cm GW:5.00kg NW:3.40kg L => L:56cm W:37cm H:20cm GW:5.20kg NW:3.60kg XL => L:56cm W:37cm H:20cm GW:5.40kg NW:3.80kg XXL => L:56cm W:37cm H:20cm GW:5.50kg NW:3.90kg 3XL => L:56cm W:37cm H:20cm GW:5.60kg NW:4.00kg 4XL => L:56cm W:37cm H:20cm GW:5.70kg NW:4.10kg 5XL => L:56cm W:37cm H:20cm GW:5.80kg NW:4.20kg 6XL => L:56cm W:37cm H:20cm GW:6.00kg NW:4.40kg

KARIBAN

REFERENCE : K545

NAME : JOFREY

SIZES : S_M_L_XL_XXL_3XL_4XL_5XL_6XL

COMPOSITION :

Main fabric : Polycotton poplin 65/35 - 100 65%polyester / 35%cotton
Main fabric : Polycotton poplin 65/35 - 110 65%polyester / 35%cotton

WEIGHT :

Main fabric : 100 gsm
Main fabric : 110 gsm

FABRIC CONSTRUCTION AND FINISHING :

COLORS	PANTONE SERIGRAPHIE
White	White
Black	Black
Navy	296C
Classic red	200C
Bright sky	2708C
Zinc	447C
Brown	440C
Wine	504C
Burnt lime	583C
Orange	1585C
Silver	Cool gray 7C
Bright turquoise	638C

deetex.de

KARIBAN

REFERENCE : K546

NAME : NEVADA 2

SIZES : S_M_L_XL_XXL_3XL_4XL

COMPOSITION :
Main fabric : Cotton 155 100%cotton

WEIGHT :
Main fabric : 155gsm

FABRIC CONSTRUCTION AND FINISHING :
Size 4XL only for Navy and White / 130x70 / 30x30 Peached finish

COLORS	PANTONE SERIGRAPHIE
Black	Black
White	White
Navy	296C
Beige	7529C
Sky blue	644C
Chocolate	439C
Red	186C
Light royal blue	2935C
Forest green	553C
Dark grey	432C
Burnt orange	716C
Light yellow	121C

DESCRIPTION

Français :	Chemise homme manches longues
English :	Long sleeve shirt
Nederlands :	Hemd met lange mouwen
Deutsch :	Langarm Hemd
Español :	Camisa de manga larga
Italiano :	Camicia maniche lunghe
Português :	Camisa de manga comprida

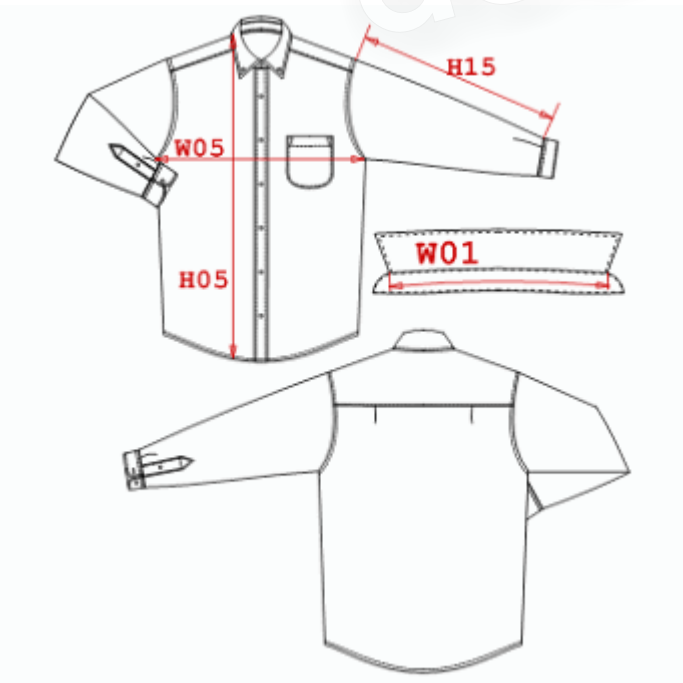

MEASUREMENT

Description	S	M	L	XL	XXL	3XL	4XL
W05 1/2 largeur poitrine/1/2 chest width	57	60	63	66	69	72	76
H05 Hauteur totale/total height	78,70	80,75	82,80	84,85	86,90	88,90	91,70
W01 Longueur encolure / Neckline lenght	41,15	42,30	43,50	44,70	45,90	47,10	48,55
H15 Longueur manche sans poignet / Sleeve length without cuff	55	57	59	61	63	65	67,75

PACKING

Box	20 pcs / box Size S-4XL => L:59cm W:30cm H:37.5cm GW:9.50kg NW:8.00kg

CARE LABEL

deetex.de

KARIBAN

REFERENCE : K547

NAME : ARIANA 2

SIZES : S_M_L_XL_XXL_3XL_4XL

COMPOSITION :
Main fabric : Cotton 140 100% cotton

WEIGHT :
Main fabric : 140 gsm

FABRIC CONSTRUCTION AND FINISHING :
Size 4XL only for Navy and Whie / 130x70 / 30x30 Peached finish

COLORS	PANTONE SERIGRAPHIE
Black	Black
White	White
Navy	296C
Beige	7529C
Sky blue	644C
Red	186C
Forest green	553C
Light royal blue	2935C
Chocolate	439C
Dark grey	432C
Burnt orange	716C
Light yellow	121C

DESCRIPTION

Français :	Chemisette
English :	Short sleeve shirt
Nederlands :	Hemd
Deutsch :	Hemd
Español :	Camisa de manga corta
Italiano :	Camicia a maniche corte
Português :	Camisa manga curta

deetex.de

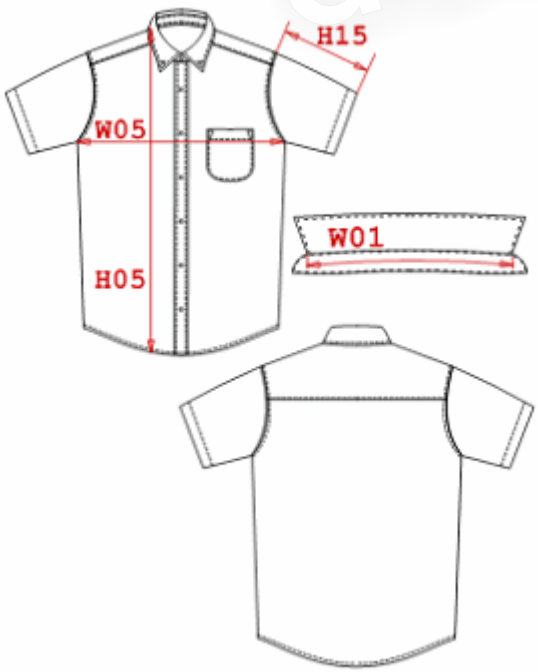

MEASUREMENT

Description	S	M	L	XL	XXL	3XL	4XL
W05 1/2 largeur poitrine/1/2 chest width	56	59	62	65	68	72	76
H05 Hauteur totale/total height	77,50	79,45	81,40	83,30	85,25	87,70	90,15
W01 Longueur encolure / Neckline lenght	41,95	43,20	44,40	45,65	46,85	48,35	49,85
H15 Longueur manche / Sleeve length	23	24	25	26	27	28	29

PACKING

Box	25 pcs / box Size S-4XL => L:59cm W:30cm H:37.5cm GW:9.5kg NW:8kg

CARE LABEL

KARIBAN

REFERENCE : K548

NAME : JUDITH

SIZES : XS_S_M_L_XL_XXL_3XL_4XL

COMPOSITION :

Main fabric : Polycotton poplin 65/35 - 100 110x76 45x45 with Easy Care
For white colour 65%polyester / 35%cotton
Main fabric : Polycotton poplin 65/35 - 110 110x76 45x45 with Easy Care
For colours 65%polyester / 35%cotton

WEIGHT :

Main fabric : 100 gsm
Main fabric : 110 gsm

COLORS	PANTONE SERIGRAPHIE
White	White
Black	Black
Navy	296C
Classic red	200C
Bright sky	2708C
Zinc	447C
Brown	440C
Wine	504C
Burnt lime	583C
Orange	1585C
Silver	Cool gray 7C
Bright turquoise	638C

DESCRIPTION

Français :	Chemise femme manches courtes
English :	Ladies short sleeve easy care polycotton poplin shirt
Nederlands :	Dames blouse met korte mouwen
Deutsch :	Pflegeleichte polycotton damen kurzarm bluse
Español :	Camisa de manga corta para mujer
Italiano :	Camicia donna maniche corte policotone popeline
Português :	Camisa de senhora de manga curta tratamento fácil

CARE LABEL

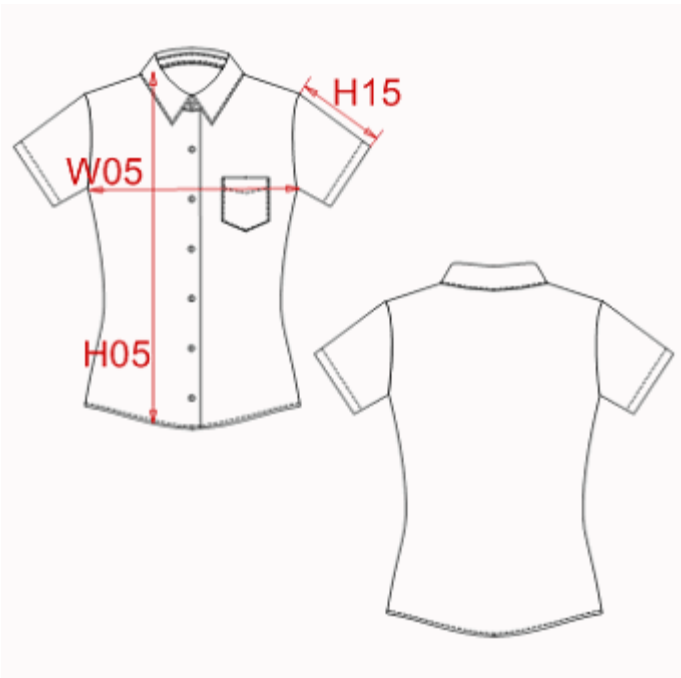

MEASUREMENT

Description	XS	S	M	L	XL	XXL	3XL	4XL		
W051/2 largeur poitrine/1/2 chest width	46	48	50	53	56	59	62	65		
H15 Longueur manche sans poignet / Sleeve length without cuff	18,50	19,50	20,50	21,60	22,75	23,85	25	26,10		
H05 Hauteur totale dos / Back total height	62,65	64,20	66,75	67,70	69,60	71,55	73,45	75,40		

PACKING

Box	12 pcs / box XS => L:52cm W:34cm H:20cm GW:3.20kg NW:1.80kg S => L:52cm W:34cm H:20cm GW:3.30kg NW:1.90kg M => L:52cm W:34cm H:20cm GW:3.40kg NW:2.00kg L => L:52cm W:34cm H:20cm GW:3.50kg NW:2.10kg XL => L:52cm W:34cm H:20cm GW:3.60kg NW:2.20kg XXL => L:52cm W:34cm H:20cm GW:3.70kg NW:2.30kg 3XL => L:52cm W:34cm H:20cm GW:3.80kg NW:2.40kg 4XL => L:52cm W:34cm H:20cm GW:3.90kg NW:2.50kg

delex.de

KARIBAN

REFERENCE : K549

NAME : JESSICA

SIZES : XS_S_M_L_XL_XXL_3XL_4XL

COMPOSITION :

Main fabric : Polycotton poplin 65/35 - 100 110x76 45x45 with Easy Care
For white colour 65%polyester / 35%cotton
Main fabric : Polycotton poplin 65/35 - 110 110x76 45x45 with Easy Care
For colours 65%polyester / 35%cotton

WEIGHT :

Main fabric : 100 gsm
Main fabric : 110 gsm

COLORS	PANTONE SERIGRAPHIE
White	White
Black	Black
Navy	296C
Classic red	200C
Bright sky	2708C
Zinc	447C
Brown	440C
Wine	504C
Burnt lime	583C
Orange	1585C
Silver	Cool gray 7C
Bright turquoise	638C

DESCRIPTION

Français :	Chemise femme manches longues
English :	Ladies long sleeve easy care polycotton poplin shirt
Nederlands :	Dames blouse met lange mouwen
Deutsch :	Pflegeleichte polycotton damen kurzarm bluse
Español :	Camisa de manga larga para mujer
Italiano :	Camicia donna maniche lunghe policotone popeline
Português :	Camisa de senhora de manga comprida tratamento fácil

CARE LABEL

MEASUREMENT

Description	XS	S	M	L	XL	XXL	3XL	4XL		
W051/2 largeur poitrine/1/2 chest width	46	48	50	53	56	59	62	65		
H15 Longueur manche sans poignet / Sleeve length without cuff	54	55	56	57,10	58,25	59,35	60,50	61,60		
H05 Hauteur totale dos / Back total height	62,65	64,20	66,75	67,70	69,60	71,55	73,45	75,40		

PACKING

Box	12 pcs / box XS => L:52cm W:34cm H:20cm GW:3.50kg NW:2.00kg S => L:52cm W:34cm H:20cm GW:3.60kg NW:2.20kg M => L:52cm W:34cm H:20cm GW:3.80kg NW:2.40kg L => L:52cm W:34cm H:20cm GW:3.90kg NW:2.50kg XL => L:52cm W:34cm H:20cm GW:4.00kg NW:2.60kg XXL => L:52cm W:34cm H:20cm GW:4.10kg NW:2.70kg 3XL => L:52cm W:34cm H:20cm GW:4.20kg NW:2.80kg 4XL => L:52cm W:34cm H:20cm GW:4.40kg NW:3.00kg

KARIBAN

REFERENCE : K551 **NAME :** ACE

SIZES : S_M_L_XL_XXL_3XL_4XL_5XL_6XL

COMPOSITION :

Main fabric : Polycotton poplin 65/35 - 100 110x76 45x45
with Easy Care
For white color 65%polyester / 35%cotton
Main fabric : Polycotton poplin 65/35 - 110 110x76 45x45
with Easy Care
For colors 65%polyester / 35%cotton

WEIGHT :

Main fabric : 100 gsm
Main fabric : 110 gsm

DESCRIPTION

Français :	Chemise homme manches courtes
English :	Men's short sleeve easy care polycotton poplin shirt
Nederlands :	Heren overhemd korte mouwen
Deutsch :	Pflegeleichtes polycotton herren kurzarm hemd
Español :	Camisa de manga corta
Italiano :	Camicia uomo maniche corte policotone popeline
Português :	Camisa de manga curta tratamento fácil

CARE LABEL

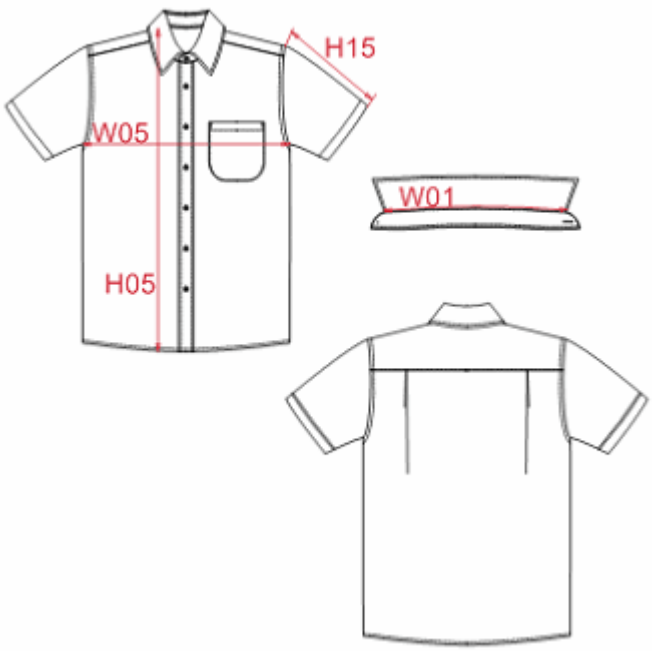

MEASUREMENT

Description	S	M	L	XL	XXL	3XL	4XL	5XL	6XL	
W01 Longueur encolure / Neckline lenght	41,25	42,50	43,75	45	46,25	47,85	49,55	51,15	52,75	
W051/2 largeur poitrine/1/2 chest width	54	57	60	63	66	69	72	75	78	
H15 Longueur manche sans poignet / Sleeve length without cuff	24	25	26	27	28	29	30	31	32	
H05 Hauteur totale dos / Back total height	76	78	80	82	84	86	88	90	92	

PACKING

Box	12 pcs / box S => L:56cm W:37cm H:20cm GW:4.30kg NW:2.70kg M => L:56cm W:37cm H:20cm GW:4.40kg NW:2.80kg L => L:56cm W:37cm H:20cm GW:4.50kg NW:2.90kg XL => L:56cm W:37cm H:20cm GW:4.60kg NW:3.00kg XXL => L:56cm W:37cm H:20cm GW:4.70kg NW:3.10kg 3XL => L:56cm W:37cm H:20cm GW:4.80kg NW:3.20kg 4XL => L:56cm W:37cm H:20cm GW:4.90kg NW:3.30kg 5XL => L:56cm W:37cm H:20cm GW:5.00kg NW:3.40kg 6XL => L:56cm W:37cm H:20cm GW:5.10kg NW:3.50kg

KARIBAN

REFERENCE : K551

NAME : ACE

SIZES : S_M_L_XL_XXL_3XL_4XL_5XL_6XL

COMPOSITION :

Main fabric : Polycotton poplin 65/35 - 100 65%polyester / 35%cotton
Main fabric : Polycotton poplin 65/35 - 110 65%polyester / 35%cotton

WEIGHT :

Main fabric : 100 gsm
Main fabric : 110 gsm

FABRIC CONSTRUCTION AND FINISHING :

COLORS	PANTONE SERIGRAPHIE
White	White
Black	Black
Navy	296C
Classic red	200C
Bright sky	2708C
Zinc	447C
Brown	440C
Wine	504C
Burnt lime	583C
Orange	1585C
Silver	Cool gray 7C
Bright turquoise	638C

deetex.de

KARIBAN

REFERENCE : K553

NAME : AVENTURE

SIZES : M_L_XL_XXL

COMPOSITION :
Main fabric : Cotton 145 100%cotton

COLORS	PANTONE SERIGRAPHIE
Navy	296C
Terre	7530C

WEIGHT :
Main fabric : 145 gsm

FABRIC CONSTRUCTION AND FINISHING :
60x60/20x20

DESCRIPTION

Français :	Chemise homme manches longues
English :	Long sleeve shirt
Nederlands :	Hemd met lange mouwen
Deutsch :	Herren langarm Hemd
Español :	Camisa de manga larga
Italiano :	Camicia uomo
Português :	Camisa de manga comprida

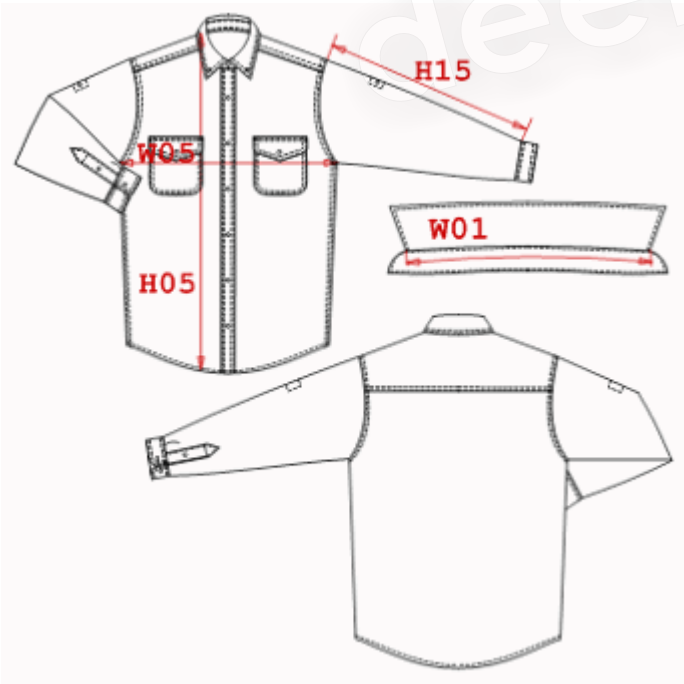

MEASUREMENT

Description	M	L	XL	XXL			
W05 1/2 largeur poitrine/1/2 chest width	59	62	65	68			
H05 Hauteur totale/total height	81	83	85	87			
W01 Longueur encolure / Neckline lenght	41,50	43	44,50	46			
H15 Longueur manche sans poignet / Sleeve length without cuff	58	60	62	64			

PACKING

Box	25 pcs / box Size M-XXL => L:58cm W:37cm H:36cm GW:13kg NW:11kg

CARE LABEL

deetex.de

KARIBAN

REFERENCE : K562

NAME : TROPHY

SIZES : M_L_XL_XXL

COLORS	PANTONE SERIGRAPHIE
Beige	7530C

COMPOSITION :
Main fabric : Peached cotton twill 145 100%cotton

WEIGHT :
Main fabric : 145 gsm

FABRIC CONSTRUCTION AND FINISHING :
130x70/32x32 Garment washed

DESCRIPTION

Français :	Chemise homme manches longues
English :	Long sleeve shirt
Nederlands :	Hemd met lange mouwen
Deutsch :	Langarm Hemd
Español :	Camisa de manga larga
Italiano :	Camicia maniche lunghe
Português :	Camisa de manga comprida

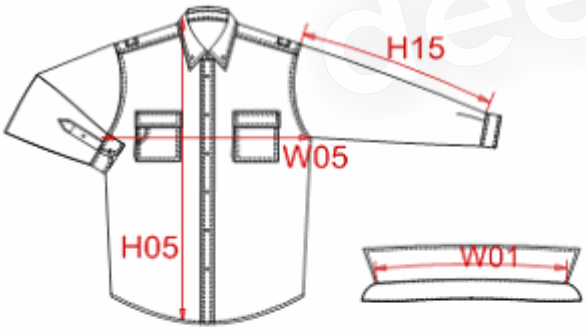

MEASUREMENT

Description	M	L	XL	XXL			
W05 1/2 largeur poitrine/1/2 chest width	59	62	65	68			
H05 Hauteur totale/total height	81,50	83,50	85,50	87,50			
W01 Longueur encolure / Neckline lenght	42,25	43,75	45,25	46,75			
H15 Longueur manche sans poignet / Sleeve length without cuff	56	58	60	62			

PACKING

Box	25 pcs / box Size M-XXL => L:56cm W:37cm H:41cm GW:10.00kg NW:8.00kg

CARE LABEL

deetex.de

KARIBAN

REFERENCE : K570

NAME : TROPICAL

SIZES : M_L_XL_XXL_3XL

COMPOSITION :
Main fabric : Cotton peach poplin 120 100%cotton

COLORS	PANTONE SERIGRAPHIE
Black	Black
White	White
Capuccino	411C
Navy	296C
Red	186C
Beige	7529C

WEIGHT :
Main fabric : 120 gsm

FABRIC CONSTRUCTION AND FINISHING :
40x40 / 133x72 Garment washed

DESCRIPTION

Français :	Chemise homme manches courtes
English :	Short sleeve shirt
Nederlands :	Hereehemd met korte mouwen
Deutsch :	Kurzarm Hemd
Español :	Camisa de manga corta para hombre
Italiano :	Camicia uomo maniche corte
Português :	Camisa tropical de homem

deetex.de

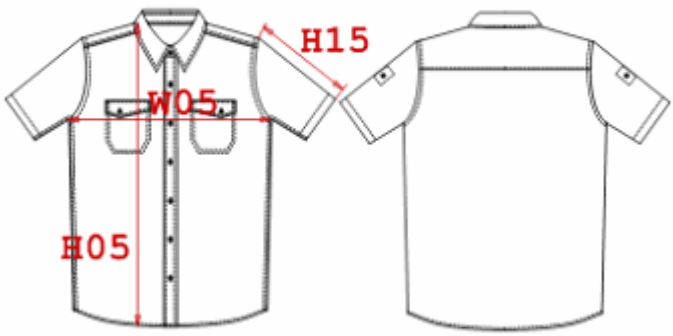

MEASUREMENT

Description	M	L	XL	XXL	3XL		
AFTER WASH							
W05 1/2 largeur poitrine / 1/2 chest width	55	58	61	65	69		
H05 Hauteur totale/total height	78,75	80,75	82,75	85,50	88,25		
H15 Longueur manche / Sleeve length	23	25	27	29	31		

PACKING

Box	25 pcs / box M-3XL => L:54cm W:39cm H:37cm GW:9.50kg NW:8.00kg

CARE LABEL

KARIBAN

REFERENCE : K571

NAME : TRENDY

SIZES : M_L_XL_2XL

COMPOSITION :
Main fabric : Cotton peach poplin 120 100%cotton

COLORS	PANTONE SERIGRAPHIE
Black	Black
White	White
Capuccino	411C

WEIGHT :
Main fabric : 120 gsm

FABRIC CONSTRUCTION AND FINISHING :
40x40 133x72 Garment washed

DESCRIPTION

Français :	Chemise homme manches longues
English :	Long sleeve shirt
Nederlands :	Hemd met lange mouwen
Deutsch :	Langarm Hemd
Español :	Camisa de manga larga
Italiano :	Camicia maniche lunghe
Português :	

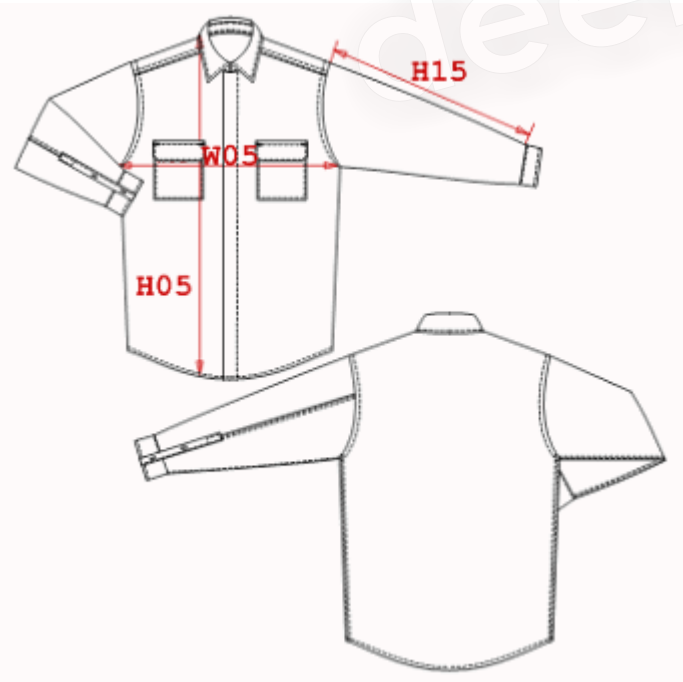

MEASUREMENT

Description	M	L	XL	XXL			
W05 1/2 largeur poitrine/1/2 chest width	56	59	62	65			
H05 Hauteur totale/total height	77,05	79,05	81,10	83,15			
H15 Longueur dessus de manche sans poignet / Sleeve length without cuff	60	62	64	66			

PACKING

Box	25 pcs / box Size M-XXL => L:50cm W:35cm H:35.5cm GW:9.5kg NW:8kg

CARE LABEL

deetex.de

KARIBAN

REFERENCE : K572

NAME : TROPICAL LADY

SIZES : S_M_L_XL_XXL

COMPOSITION :
Main fabric : Cotton peach poplin 120 100%cotton

WEIGHT :
Main fabric : 120 gsm

FABRIC CONSTRUCTION AND FINISHING :
Garment washed

COLORS	PANTONE SERIGRAPHIE
Black	Black
White	White
Capuccino	411C
Navy	296C
Red	186C
Beige	7529C
Khaki	5743C

DESCRIPTION

Français :	Chemise femme manches courtes cintrée
English :	Short sleeves fitted shirt
Nederlands :	Getailleerd dameshemd met korte mouwen
Deutsch :	Taillierte damen-kurzarmbluse
Español :	Camisas de manga corta para mujer
Italiano :	Camicia donna maniche corte taglio sagomato
Português :	Camisa Tropical de senhora

MEASUREMENT

Description	S	M	L	XL	XXL		
AFTER WASH							
W05 1/2 largeur poitrine / 1/2 chest width	49,45	51,45	53,45	56,45	59,45		
H05 Hauteur totale/total height	63	64,50	66	68,25	70,50		
H15 longueur manche / Sleeve length	19,40	20,40	21,45	22,75	24		

PACKING

Box	25 pcs / box S-XXL => L:52cm W:36cm H:20cm GW:6.50kg NW:5.50kg

CARE LABEL

deetex.de

KARIBAN

REFERENCE : K626

NAME : BLAZER II

SIZES : 48_50_52_54_56_58_60_62_64_66_68_70

COMPOSITION :

Main fabric : Blazer fabric 160 62%polyester / 35%wool / 3%elastane

COLORS	PANTONE SERIGRAPHIE
Navy	296C
Black	Black

WEIGHT :

Main fabric : 160gsm

DESCRIPTION

Français :	Veste blazer
English :	Blazer jacket
Nederlands :	Blazer vest
Deutsch :	Blazer
Español :	Chaqueta blazer
Italiano :	Giacca blazer
Português :	Blazer

MEASUREMENT

Description	48	50	52	54	56	58	60	62	64	66	68	70
H05 Hauteur totale / Total height	77,35	78,40	79,45	80,50	81,55	82,60	83,65	84,70	85,75	86,80	87,85	88,85
W05 1/2 largeur poitrine / 1/2 chest width	54,20	56,15	58,05	60	61,95	63,85	65,80	67,75	69,70	71,65	73,55	75,50
H15 Longueur manche / Sleeve length	66,60	67,50	68,40	69,30	70,20	71,10	72	72,90	73,80	74,70	75,60	76,50

PACKING

Box	10 pcs / box On hanger inside. 48-60 => L:50cm W:48cm H:105cm GW:10.00kg NW:8.00kg

CARE LABEL

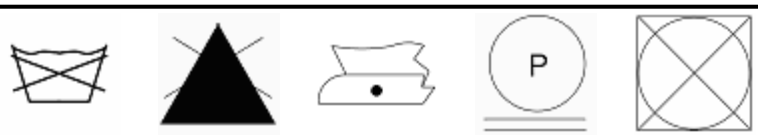

deeter.de

KARIBAN

REFERENCE : K630

NAME : WORKER

SIZES : S_M_L_XL_XXL_3XL_4XL

COMPOSITION :

Shell : Polyester oxford 250 100%polyester
Lining : Lining 210T 100%polyester
Padding : Polyfil 250 100%polyester

WEIGHT :

Shell : 250 gsm
Lining : 60 gsm
Padding : 250 gsm

FABRIC CONSTRUCTION AND FINISHING :

Polyester oxford with PVC coating

COLORS	PANTONE SERIGRAPHIE
Navy	296C
Black	Black
Red	186C
Forest green	5535C
Light royal blue	301C
Convoy grey	Cool gray 11C

DESCRIPTION

Français :	Bodywarmer
English :	Bodywarmer
Nederlands :	Bodywarmer
Deutsch :	Bodywarmer
Español :	Bodywarmer
Italiano :	Bodywarmer
Português :	Colete

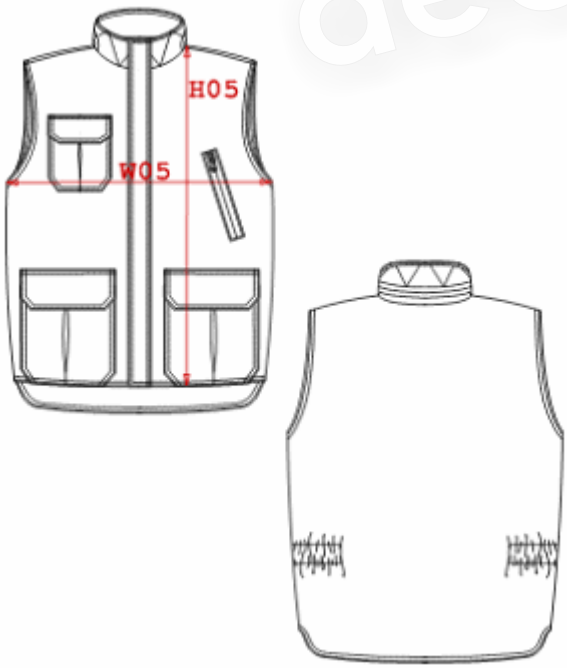

MEASUREMENT

Description	S	M	L	XL	2XL	3XL	4XL
H05 Hauteur totale devant / Front total height	72,85	74,85	76,85	78,85	80,85	83,60	86,35
W05 1/2 largeur poitrine / 1/2 chest width	57	60	63	66	69	73	77

PACKING

Box	10 pcs / box S => L:60cm W:40cm H:32cm GW:10.00kg NW:8.50kg M => L:60cm W:40cm H:32cm GW:10.00kg NW:8.50kg L => L:64cm W:44cm H:32cm GW:11.00kg NW:9.50kg XL => L:64cm W:44cm H:32cm GW:11.00kg NW:9.50kg XXL => L:68cm W:48cm H:32cm GW:12.50kg NW:11.00kg 3XL => L:70cm W:50cm H:32cm GW:14.00kg NW:12.50kg 4XL => L:70cm W:50cm H:32cm GW:14.00kg NW:12.50kg

CARE LABEL

deetex.de

KARIBAN

REFERENCE : K632

NAME : EAGLE II

SIZES : S_M_L_XL_XXL_3XL_4XL

COMPOSITION :

Main fabric : Nylon 210T AC coating 70 For dark colors
only 100% polyamide
Main fabric : Nylon 210T milky coating 70 For light colors
only 100%polyamide
Lining 1 : Polytricot lining 100%polyester
Mesh : Mesh 65 100%polyester
Lining 2 : Lining 210T For inner sleeves 100%polyester

WEIGHT :

Main fabric : 70 gsm
Main fabric : 70 gsm
Lining 1 : 150 gsm
Mesh : 65 gsm
Lining 2 : 60 gsm

FABRIC CONSTRUCTION AND FINISHING :

Acrylic coating

COLORS	PANTONE SERIGRAPHIE
Black	Black
Navy	296C
Red	186C

DESCRIPTION

Français :	Coupe-vent doublé
English :	Lined windbreaker
Nederlands :	Gevoerde windbreaker
Deutsch :	Gefütterte windjacke
Español :	Cortaviento forrado
Italiano :	Giacca a vento foderata
Português :	Cortavento windbreaker

deetex.de

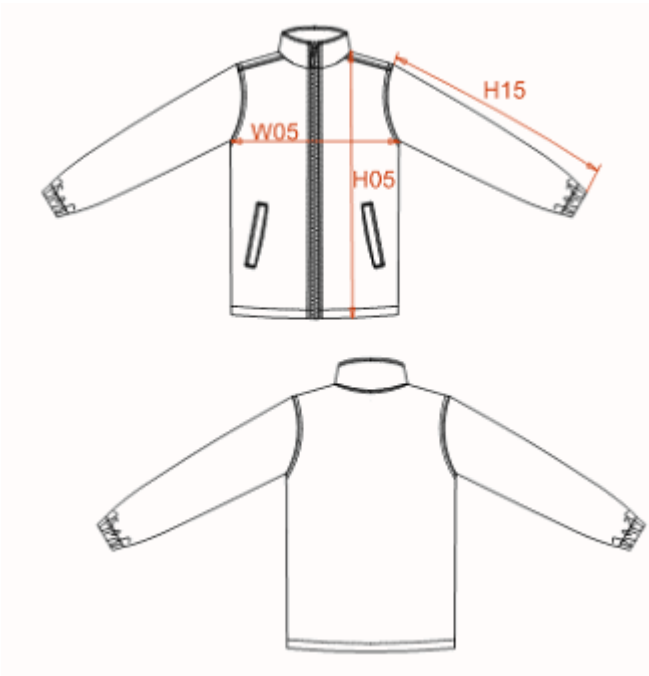

MEASUREMENT

Description	S	M	L	XL	2XL	3XL	
H05 Hauteur totale / Total height	77,15	79,15	81,15	83,15	85,90	88,65	
W05 1/2 largeur poitrine / 1/2 chest width	58	61	64	67	71	75	
H15 Longueur manche avec poignet / Sleeve length with cuff	64,15	66,05	68	69,90	72,05	74,15	

PACKING

Box	25 pcs / box S-L => L:66cm W:46cm H:20cm GW:12.30kg NW:10.80kg XL-XXL => L:67cm W:48cm H:20cm GW:12.30kg NW:10.80kg 3XL => L:67cm W:48cm H:20cm GW:13.00kg NW:11.00kg 4XL => L:79cm W:56cm H:20cm GW:13.00kg NW:11.00kg

CARE LABEL

KARIBAN

REFERENCE : K636

NAME : RUNNER

SIZES : S_M_L_XL_XXL

COMPOSITION :

Main fabric : Nylon 210T AC coating 70 100%polyamide
Mesh : Mesh 65 For back bottom 100%polyester

COLORS	PANTONE SERIGRAPHIE
Black	Black
Royal blue	286C
Red	186C
Orange	166C
Yellow	129C

WEIGHT :

Main fabric : 70 gsm
Mesh : 65 gsm

FABRIC CONSTRUCTION AND FINISHING :

Acrylic coating

DESCRIPTION

Français :	Gilet d'entrenainement dos filet
English :	Running gilet
Nederlands :	Trainingsvest met rugnet
Deutsch :	Training Weste
Español :	Chaleco deportivo con espalda de malla
Italiano :	Gilet da allenamento fodera in rete
Português :	Colete runner

MEASUREMENT

Description	S	M	L	XL	XXL		
W05 1/2 largeur poitrine/1/2 chest width	49,90	52,90	55,90	58,90	62,90		
H05 Hauteur totale/ Total height	61,10	63,20	65,25	67,30	70,15		

PACKING

Box	50 pcs / box S => L:52cm W:36cm H:20cm GW:6.00kg NW:5.00kg M => L:52cm W:36cm H:20cm GW:6.00kg NW:5.00kg L => L:60cm W:40cm H:19cm GW:6.00kg NW:5.00kg XL => L:60cm W:40cm H:19cm GW:6.00kg NW:5.00kg XXL => L:60cm W:40cm H:19cm GW:6.00kg NW:5.00kg

CARE LABEL

deetex.de

REFERENCE : K638

NAME : MATT

SIZES : S_M_L_XL_XXL_3XL

COLORS	PANTONE SERIGRAPHIE
Black	Black
Dark chocolate	476C

COMPOSITION :

Shell : Polyester oxford 250 100%polyester
Lining 1 : Polar fleece 300 For inner body and collar 100%polyester
Lining 2 : Lining 210T For inner sleeves and collar 100%polyester
Wad 1 : Polyfil 80 For sleeves 100%polyester

WEIGHT :

Shell : 250 gsm
Lining 1 : 300 gsm
Lining 2 : 60 gsm
Wad 1 : 80 gsm

FABRIC CONSTRUCTION AND FINISHING :

PVC coating

DESCRIPTION

Français :	Blouson avec bande réfléchissante
English :	Blouson jacket
Nederlands :	Veste met reflecterende band
Deutsch :	Jacke mit reflector-paspelierung
Español :	Chaqueta con banda reflectante
Italiano :	Giubbotto con banda fosforescente
Português :	Blusão com vivo reflector

CARE LABEL

MEASUREMENT

Description	S	M	L	XL	2XL	3XL	
H05 Hauteur totale / Total height	73,75	75,75	77,75	79,75	82,50	85,25	
W05 1/2 largeur poitrine / 1/2 chest width	57	60	63	66	70	74	
H15 Longueur manche / Sleeve length	65	67	69	71	73,70	76,40	

PACKING

Box	10 pcs / box S => L:57cm W:39cm H:30cm GW:11.70kg NW:10.50kg M => L:60cm W:40cm H:30cm GW:12.20kg NW:11.00kg L => L:62cm W:41cm H:30cm GW:13.00kg NW:11.70kg XL => L:64cm W:42cm H:30cm GW:13.50kg NW:12.00kg XXL => L:66cm W:43cm H:30cm GW:14.50kg NW:13.00kg 3XL => L:68cm W:43cm H:30cm GW:17.00kg NW:15.50kg

cleetex.de

KARIBAN

REFERENCE : K639

NAME : SCORE

SIZES : S_M_L_XL_XXL_3XL

COMPOSITION :

Main fabric : Polyester PVC coating 175 100%polyester
Lining 1 : Polar fleece 300 For inner body and collar 100%polyester
Lining 2 : Lining 210T For inner sleeves and collar 100%polyester
Wad 1 : Polyfil 80 100%polyester

WEIGHT :

Main fabric : 175 gsm
Lining 1 : 300 gsm
Lining 2 : 60 gsm
Wad 1 : 80 gsm

FABRIC CONSTRUCTION AND FINISHING :

With PVC coating

COLORS	PANTONE SERIGRAPHIE
Black / Orange / Black	Black / 021C / Black
Navy / Grey / Navy	296C / 423C / 296C
Dark grey / Orange / Dark grey	432C / 021C / 432C
Red / Black	186C / Black

DESCRIPTION

Français :	Blouson pétanque
English :	Functional jacket
Nederlands :	Pétanquejak
Deutsch :	Kugelspiel-jacke
Español :	Chaqueta con mangas amovibles
Italiano :	Blouson
Português :	Blusão com mangas amovíveis

deetex.de

CARE LABEL

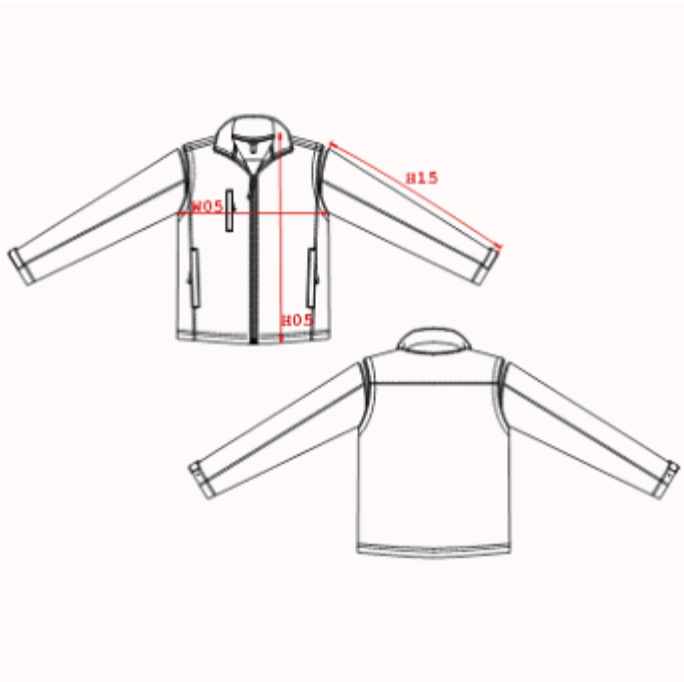

MEASUREMENT

Description	S	M	L	XL	XXL	3XL	
H05 Hauteur totale / Total height	72,90	74,90	76,95	79,70	82,45	85,20	
W05 1/2 largeur poitrine / 1/2 chest width	57	60	63	67	71	75	
H15 Longueur manche / Sleeve length	68	69,50	71	73,20	75,40	77,60	

PACKING

Box	10 pcs / box S => L:57cm W:39cm H:27cm GW:9.30kg NW:8.00kg M => L:60cm W:40cm H:27cm GW:10.50kg NW:9.30kg L => L:62cm W:41cm H:27cm GW:10.80kg NW:9.40kg XL => L:64cm W:42cm H:27cm GW:11.00kg NW:9.70kg XXL => L:68cm W:43cm H:27cm GW:11.90kg NW:10.40kg 3XL => L:70cm W:44cm H:27cm GW:11.00kg NW:12.60kg

KARIBAN

REFERENCE : K644

NAME : MONTANA

SIZES : S_M_L_XL_XXL

COLORS	PANTONE SERIGRAPHIE
Red / Black	186C / Black
Navy / Dark grey	296C / 432C
Black / Dark grey	Black / 432C

COMPOSITION :

Main fabric : Nylon 210T AC coating 60 100% polyamide
Lining 2 : Lining 210T 100%polyester
Padding : Polyfil 250 100%polyester

WEIGHT :

Main fabric : 60 gsm
Lining 2 : 60 gsm
Padding : 250 gsm

FABRIC CONSTRUCTION AND FINISHING :

Acrylic coating

DESCRIPTION

Français :	Bodywarmer matelassé
English :	Bodywarmer
Nederlands :	Gewatteerde bodywarmer
Deutsch :	Bodywarmer
Español :	Chaleco acolchado
Italiano :	Bodywarmer trapuntato
Português :	Colete acolchoado

deetex.de

MEASUREMENT

Description	S	M	L	XL	2XL		
W05 1/2 largeur poitrine/1/2 chest width	55,50	58,50	61,50	64,50	68,50		
H05 Hauteur totale devant / Front total height	68	70	72	74	76,75		

PACKING

Box	20 pcs / box S => L:53cm W:40cm H:54cm GW:11.50kg NW:10.00kg M => L:56cm W:40cm H:54cm GW:11.50kg NW:10.00kg L => L:59cm W:41cm H:54cm GW:11.50kg NW:10.00kg XL => L:62cm W:41cm H:54cm GW:11.50kg NW:10.00kg XXL=> L:65cm W:41cm H:54cm GW:11.50kg NW:10.00kg

CARE LABEL

KARIBAN

REFERENCE : K646

NAME : WINDBREAKER KIDS

SIZES : 6/8_8/10_10/12_12/14

COMPOSITION :
Main fabric : Nylon 210T AC coating 70 100%polyamide

WEIGHT :
Main fabric : 70 gsm

FABRIC CONSTRUCTION AND FINISHING :
Acrylic coating

COLORS	PANTONE SERIGRAPHIE
Black	Black
Navy	296C
Red	186C
White	White
Light royal blue	301C
Orange	166C
Yellow	123C

DESCRIPTION

Français :	Coupe vent non doublé enfant
English :	Kids unlined windbreaker
Nederlands :	Niet gevoerde windjack voor kinderen
Deutsch :	Kinder windjacke
Español :	Cortaviento sin forro para niños
Italiano :	Giacca a vento non foderata bambino
Português :	Windbreaker de criança

deetex.de

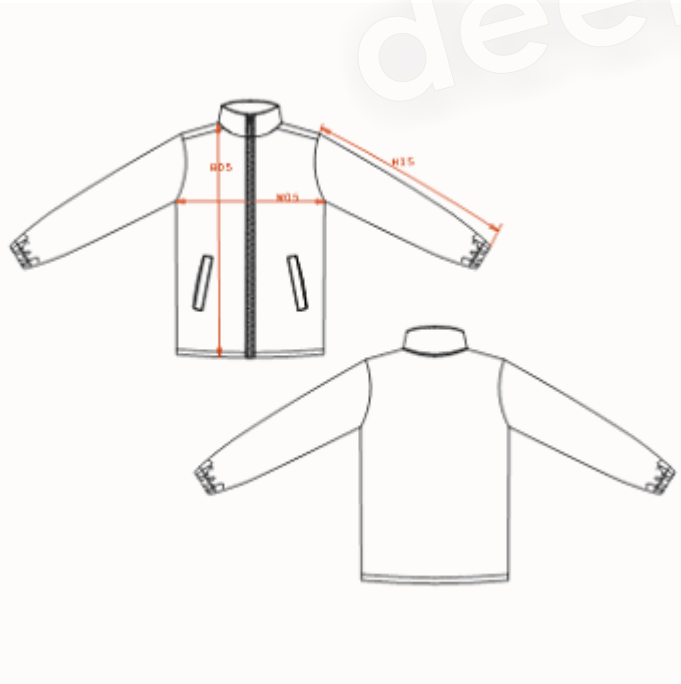

MEASUREMENT

Description	6/8	8/10	10/12	12/14			
H05 Hauteur totale / Total height	54	59,60	64,90	70,20			
W05 1/2 largeur poitrine / 1/2 chest width	43,75	46,75	49,75	52,75			
H15 Longueur manche / Sleeve length	45,05	49,05	53,05	57,50			

PACKING

Box	50 pcs / box 6/8 => L:48cm W:32cm H22cm GW:7.00kg GN:6.00kg 8/10=> L:50cm W:34cm H22cm GW:8kg GN:7kg 10/12=> L:53cm W:36cm H22cm GW:9kg GN:8kg 12/14=> L:56cm W:38cm H22cm GW:9,5kg GN:8,5kg

CARE LABEL

KARIBAN

REFERENCE : K647

NAME : WINDBREAKER

SIZES : S_M_L_XL_XXL_3XL

COMPOSITION :
Main fabric : Nylon 210T AC coating 70 100%polyamide

WEIGHT :
Main fabric : 70 gsm

FABRIC CONSTRUCTION AND FINISHING :
With AC coating

COLORS	PANTONE SERIGRAPHIE
White	White
Black	Black
Forest green	5535C
Navy	296C
Light royal blue	301C
Orange	166C
Sky blue	543C
Red	186C
Yellow	123C

DESCRIPTION

Français :	Coupe vent non doublé
English :	Unlined windbreaker
Nederlands :	Ongevoerde windjack
Deutsch :	Windjacke
Español :	Cortaviento sin forro
Italiano :	Giacca a vento non foderata
Português :	Cortavento windbreaker

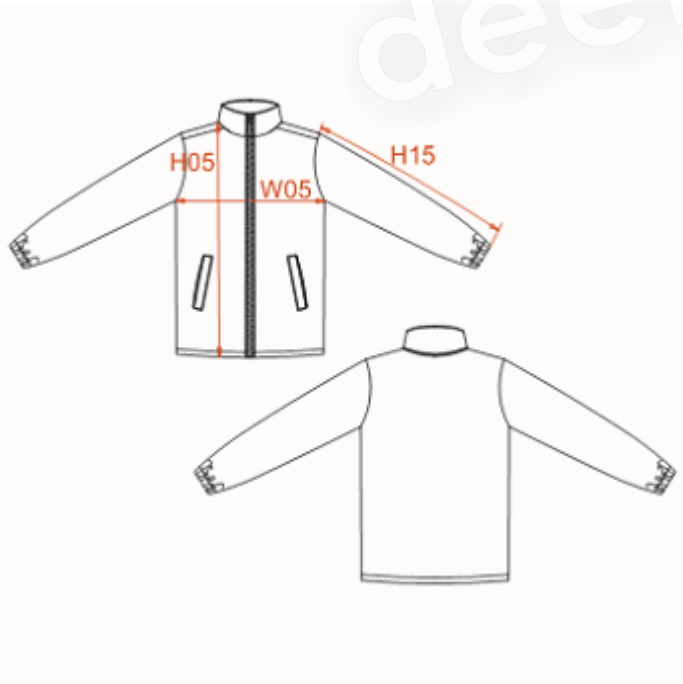

MEASUREMENT

Description	S	M	L	XL	XXL	3XL	
H05 Hauteur totale / Total height	75	78	80	82	84	90,30	
W05 1/2 largeur poitrine / 1/2 chest width	60	64	67	70	73	77	
H15 Longueur manche / Sleeve length	62	64	66	68	70	72	

PACKING

Box	50 pcs / box S => L:63cm W:41cm H:22cm GW:11.00kg NW:10.00kg M => L:66cm W:43cm H:22cm GW:11.00kg NW:10.00kg L => L:68cm W:44cm H:22cm GW:12.00kg NW:11.00kg XL => L:70cm W:45cm H:22cm GW:12.50kg NW:11.50kg XXL => L:73cm W:46cm H:22cm GW:13kg NW:12kg XXXL => L:76cm W:47cm H:22cm GW:14kg NW:13kg

CARE LABEL

deetex.de

KARIBAN

REFERENCE : K649

NAME : DISCOVERY II

SIZES : S_M_L_XL_XXL_3XL_4XL

COMPOSITION :

Main fabric : Nylon taslon 120 100%polyamide
Main fabric : Polar fleece 230 100%polyester
Wad 1 : Polyfil 200 100%polyester

COLORS	PANTONE SERIGRAPHIE
Black / Black	Black / Black
Navy / Navy	296C / 296C
Beige / Dark grey	7503C / 432C
Convoy grey / Black	Cool gray 11C / Black

WEIGHT :

Main fabric : 120 gsm
Main fabric : 230 gsm
Wad 1 : 200 gsm

DESCRIPTION

Français :	Bodywarmer
English :	Bodywarmer
Nederlands :	Bodywarmer
Deutsch :	Bodywarmer
Español :	Chaleco multibolsillos
Italiano :	Bodywarmer
Português :	Colete multibolsos

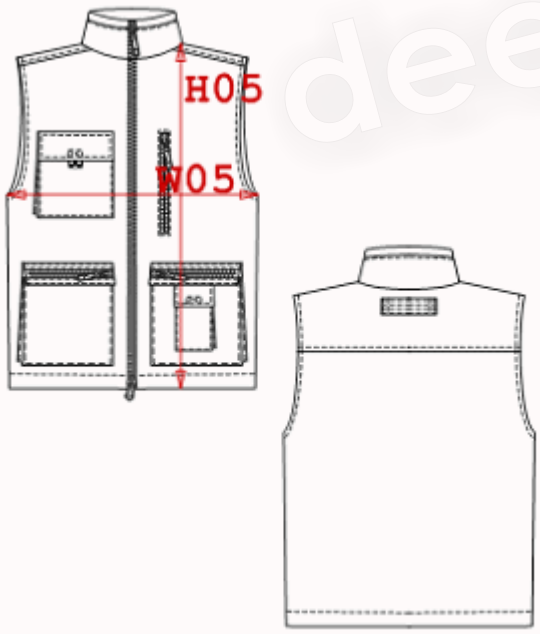

MEASUREMENT

Description	S	M	L	XL	2XL	3XL	4XL
H05 Hauteur totale / Total height	72,50	74,50	76,50	78,50	81,25	84,15	86,90
W05 1/2 largeur poitrine / 1/2 chest width	56,50	59,50	62,50	65,50	69,50	73,50	77,50

PACKING

Box	10 pcs / box S => L:60cm W:34cm H:34cm GW:10.00kg NW:8.50kg M => L:60cm W:34cm H:34cm GW:10.00kg NW:8.50kg L => L:66cm W:38cm H:34cm GW:11.00kg NW:9.50kg XL => L:66cm W:38cm H:34cm GW:11.00kg NW:9.50kg XXL => L:74cm W:44cm H:34cm GW:11.50kg NW:10.00kg 3XL => L:74cm W:44cm H:34cm GW:12.00kg NW:10.50kg 4XL => L:78cm W:48cm H:34cm GW:12.50kg NW:11.00kg

CARE LABEL

KARIBAN

REFERENCE : K653

NAME : TORNADO KIDS

SIZES : 4/6_8/10_10/12

COLORS	PANTONE SERIGRAPHIE
Black	Black
Navy	296C
Red	186C

COMPOSITION :

Main fabric : Nylon 210T AC coating 70 100%polyamide
Lining 1 : Polar fleece 200 For body lining 100%polyester
Lining : Lining 210T For sleeve 100%polyester
Wad 1 : Polyfil 80 For sleeve lining 100%polyester

WEIGHT :

Main fabric : 70 gsm
Lining 1 : 200 gsm
Lining : 60 gsm
Wad 1 : 80 gsm

FABRIC CONSTRUCTION AND FINISHING :

Acrylic coating

DESCRIPTION

Français :	Veste doublée polaire
English :	Fleece lined jacket
Nederlands :	Jacke mit fleece futter
Deutsch :	Fleece gefütterte Jacke
Español :	Chaqueta de forro polar
Italiano :	Giacca imbottita polar
Português :	Tornado de criança

deetex.de

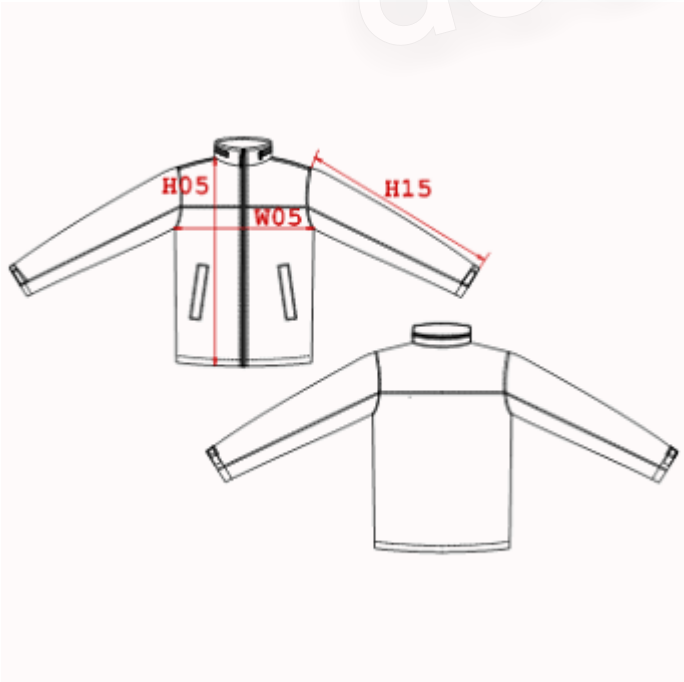

MEASUREMENT

Description	4/6	8/10	10/12				
H05 Hauteur totale / Total height	53,55	61,90	67,10				
W05 1/2 largeur poitrine / 1/2 chest width	42	46	49				
H15 Longueur manche / Sleeve length	41,60	49,40	53,65				

PACKING

Box	25 pcs / box 4/6 => L:44cm W:31cm H40cm GW:8.00kg GN:7.00kg 8/10=> L:48cm W:34cm H40cm GW:9.60kg GN:8.50kg 10/12=> L:50cm W:35cm H40cm GW:10.50kg GN:9.50kg

CARE LABEL

KARIBAN

REFERENCE : K654

NAME : TORNADO

SIZES : S_M_L_XL_XXL_3XL_4XL

COMPOSITION :

Main fabric : Nylon 210T AC coating 70 100%polyamide
Lining 1 : Polar fleece 200 For body lining 100%polyester
Lining : Lining 210T For sleeve 100%polyester
Wad 1 : Polyfil 80 For sleeve lining 100%polyester

WEIGHT :

Main fabric : 70 gsm
Lining 1 : 200 gsm
Lining : 60 gsm
Wad 1 : 80 gsm

FABRIC CONSTRUCTION AND FINISHING :

Acrylic coating

COLORS	PANTONE SERIGRAPHIE
Black	Black
Navy	296C
Red	186C
Dark grey	432C

DESCRIPTION

Français :	Veste doublée polaire
English :	Fleece lined jacket
Nederlands :	Jacke mit fleece futter
Deutsch :	Fleece gefütterte Jacke
Español :	Chaqueta de forro polar
Italiano :	Giacca foderata in pile
Português :	Blusão com forro polar

CARE LABEL

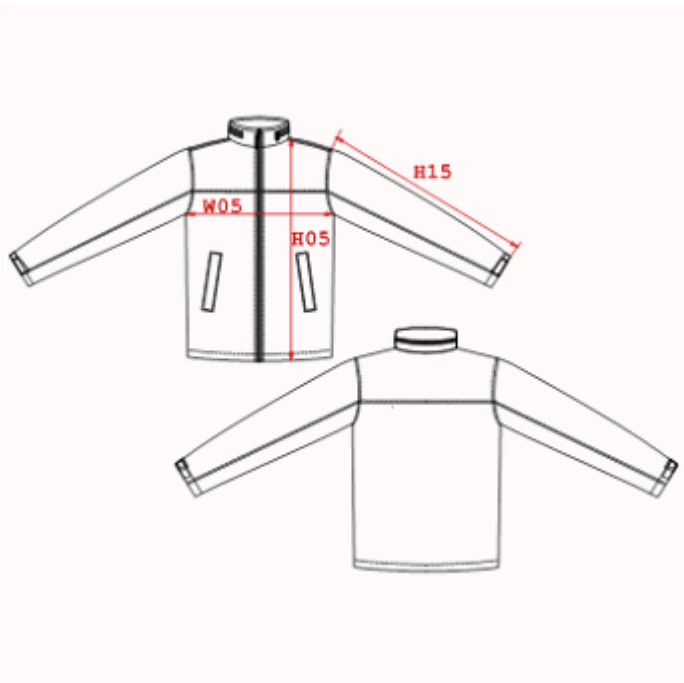

MEASUREMENT

Description	S	M	L	XL	2XL	3XL	4XL
H05 Hauteur totale / Total height	75,65	77,65	79,65	82,40	85,20	87,90	90,65
W05 1/2 largeur poitrine / 1/2 chest width	58	61	64	68	72	76	80
H15 Longueur manche / Sleeve length	61	63	65	67,20	69,40	71,60	73,80

PACKING

Box	25 pcs / box S => L:61cm W:43cm H:44cm GW:14.00kg NW:12.00kg M => L:61cm W:43cm H:44cm GW:14.50kg NW:12.50kg L => L:61cm W:43cm H:44cm GW:15.00kg NW:13.00kg XL => L:69cm W:46cm H:54cm GW:16.10kg NW:14.50kg XXL => L:69cm W:46cm H:54cm GW:16.20kg NW:14.60kg 3XL => L:71cm W:48cm H:54cm GW:17.10kg NW:15.30kg 4XL => L:74cm W:48cm H:54cm GW:17.50kg NW:16.00kg

fleetex.de

KARIBAN

REFERENCE : K657

NAME : PARKA 3 in 1

SIZES : XS_S_M_L_XL_XXL_3XL_4XL

COMPOSITION :

Main fabric : Polyester PVC coating 245 100%polyester
Lining 2 : Mesh 80 For inner body lining 100% polyester
Fabric 1 : Polar fleece 280 For inner polar fleece jacket 100%polyester
Lining 2 : Lining 210T For jacket sleeve lining 100%polyester

WEIGHT :

Main fabric : 245 gsm
Lining 2 : 80 gsm
Fabric 1 : 280 gsm
Lining 2 : 60 gsm

FABRIC CONSTRUCTION AND FINISHING :

with PVC coating and full taped seams Waterproof 4000 MM

COLORS	PANTONE SERIGRAPHIE
Navy	296C
Black	Black
Black / Red	Black / 186C
Dark Chocolate / Black	Black 4C / Black
Forest green / Black	5535C / Black
Light royal blue / Black	301C / Black
Convoy grey / Black	Cool gray 11C / Black

DESCRIPTION

Français :	Parka 3 en 1
English :	3 in 1 parka jacket
Nederlands :	Parka 3 in 1
Deutsch :	3 in 1 Parka
Español :	Parka 3 en 1
Italiano :	Parka 3 in 1
Português :	Parka 3 em 1

deetex.de

CARE LABEL

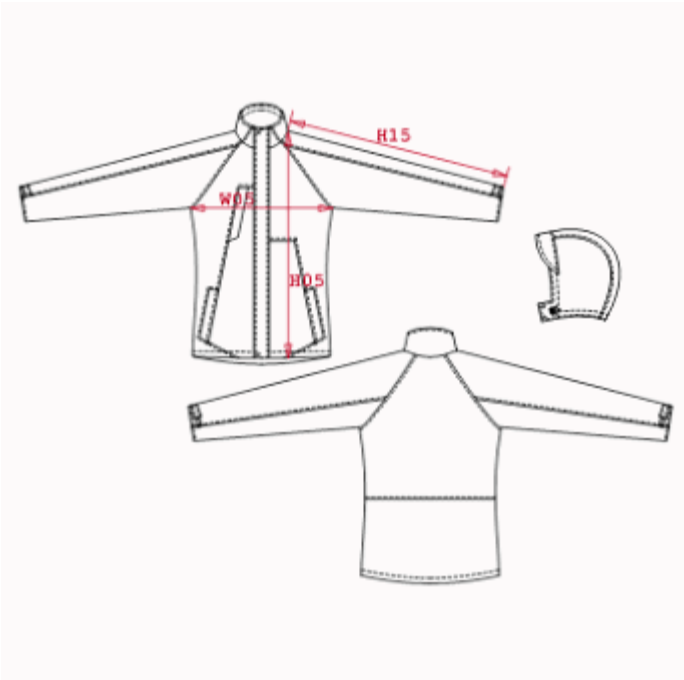

MEASUREMENT

Description	XS	S	M	L	XL	2XL	3XL	4XL		
H05 Hauteur totale devant / Front total height	76,25	78,75	81,25	83,25	85,25	87,25	89,25	92		
W051/2 largeur poitrine / 1/2 chest width	54	58	62	65	68	71	74	78		
H15 Longueur manche / Sleeve length	76,75	80	83,25	86	88,75	91,50	94,25	97,50		

PACKING

Box	10 pcs / box XS => L:60cm W:40cm H:40cm GW:15.15kg NW:14.00kg S => L:60cm W:40cm H:40cm GW:16.25kg NW:15.00kg M => L:60cm W:40cm H:40cm GW:16.65kg NW:15.50kg L => L:64cm W:40cm H:40cm GW:16.75kg NW:16.00kg XL => L:64cm W:40cm H:40cm GW:18.65kg NW:17.00kg XXL => L:66cm W:42cm H:40cm GW:19.65kg NW:18.00kg 3XL => L:66cm W:42cm H:40cm GW:20.10kg NW:18.50kg 4XL=> L:68cm W:44cm H:40cm GW:21.90kg NW:20.00kg

KARIBAN

REFERENCE : K659

NAME : MESSENGER

SIZES : S_M_L_XL_XXL_3XL

COMPOSITION :

Main fabric : Polyester PVC coating 280 100%polyester
Lining : Polar fleece 300 For lining top body 100%polyester
Lining 2 : Lining 210T For lining bottom body 100%polyester
Padding : Polyfil 120 100%polyester

WEIGHT :

Main fabric : 280 gsm
Lining : 300 gsm
Lining 2 : 60 gsm
Padding : 120 gsm

FABRIC CONSTRUCTION AND FINISHING :

PVC coating

COLORS	PANTONE SERIGRAPHIE
Black	Black
Navy	296C
Convoy grey	Cool gray 11C

DESCRIPTION

Français :	Bodywarmer
English :	Bodywarmer
Nederlands :	Bodywarmer
Deutsch :	Bodywarmer
Español :	Bodywarmer
Italiano :	Bodywarmer
Português :	Colete

deetex.de

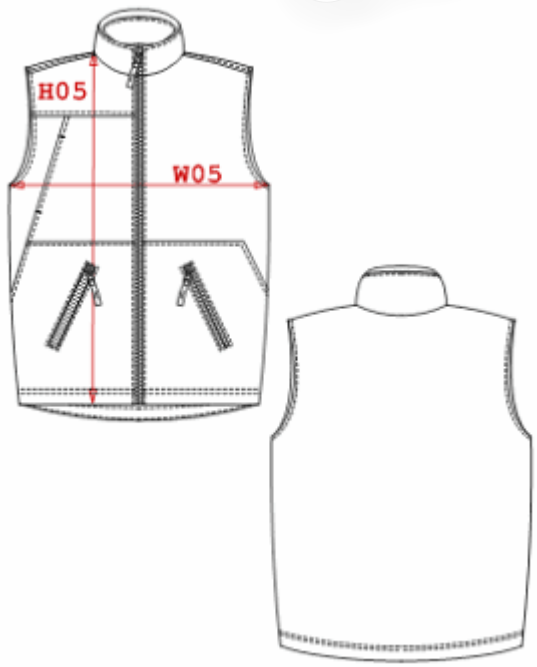

MEASUREMENT

Description	S	M	L	XL	2XL	3XL	
H05 Hauteur totale devant / Front total height	70,75	72,75	74,75	76,75	78,75	81,50	
W05 1/2 largeur poitrine / 1/2 chest width	56	59	62	65	68	72	

PACKING

Box	10 pcs / box S => L:58cm W:39cm H:30cm GW:8.50kg NW:7.00kg M => L:58cm W:39cm H:30cm GW:9.00kg NW:7.50kg L => L:64cm W:42cm H:30cm GW:9.50kg NW:8.00kg XL => L:64cm W:42cm H:30cm GW:10.00kg NW:8.50kg 2XL => L:66cm W:44cm H:30cm GW:10.50kg NW:9.00kg 3XL => L:66cm W:44cm H:30cm GW:11.00kg NW:9.50kg

CARE LABEL

KARIBAN

REFERENCE : K670

NAME : INDY

SIZES : XS_S_M_L_XL_XXL

COMPOSITION :

Main fabric : Cotton peached poplin 120 100%cotton
Mesh : Mesh 40 For inner garment 100%polyester

COLORS	PANTONE SERIGRAPHIE
Beige	480C
Navy	296C
Black	Black
Green olive	Black 2C

WEIGHT :

Main fabric : 120 gsm
Mesh : 40 gsm

FABRIC CONSTRUCTION AND FINISHING :

40x40 / 133x72 Peach poplin

DESCRIPTION

Français :	Gilet reporter
English :	Reporter gilet
Nederlands :	Reporter gilet
Deutsch :	Fotografen weste
Español :	Chaleco multibolsillos
Italiano :	Gilet reporter
Português :	Colete reporter

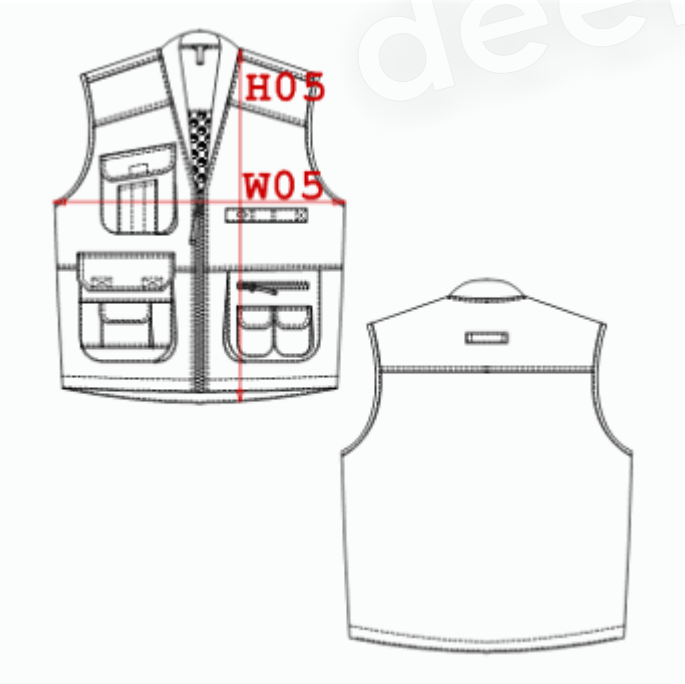

MEASUREMENT

Description	XS	S	M	L	XL	XXL	
H05 Hauteur totale devant / Front total height	66	68,75	71,50	73,50	75,50	77,50	
W05 1/2 largeur poitrine / 1/2 chest width	53	57	61	64	67	70	

PACKING

Box	25 pcs / box XS-S => L:56cm W:40cm H:22cm GW:11.20kg NW:9.70kg M-L => L:62cm W:42cm H:22cm GW:11.20kg NW:9.70kg XL-XXL => L:68cm W:44cm H:22cm GW:11.20kg NW:9.70kg

CARE LABEL

deetex.de

REFERENCE : K677

NAME : PARKA

SIZES : XS_S_M_L_XL_XXL_3XL_4XL

COMPOSITION :

Shell : Polyester oxford 250 With PVC coating 100%polyester
Lining 2 : Lining 210T For padded lining 100%polyester
Lining : Polar fleece 300 For inner collar 100%polyester
Wad 1 : Polyfil 165 For padded inner body 100%polyester

WEIGHT :

Shell : 250 gsm
Lining 2 : 60 gsm
Lining : 300 gsm
Wad 1 : 165 gsm

FABRIC CONSTRUCTION AND FINISHING :

with PVC coating / Size 4XL only for Black, Navy and Red
Polyester oxford

COLORS	PANTONE SERIGRAPHIE
Navy	296C
Black	Black
Red	186C
Forest green	5535C
Orange	166C
Kelly green	348C
Yellow	123C
Light royal blue	301C
Beige	7535C
Dark chocolate	Black 4C
Dark grey	432C
Sky blue	7695C
Convoy grey	Cool gray 11C

DESCRIPTION

Français :	Parka avec doublure matelassée
English :	Padded parka jacket
Nederlands :	Gepolsterte parkajacke mit wasserdichte nahter
Deutsch :	Parka mit gestepptem futter
Español :	Parka de forro acolchado
Italiano :	Parka per uomo
Português :	Parka acolchoada

deetex.de

CARE LABEL

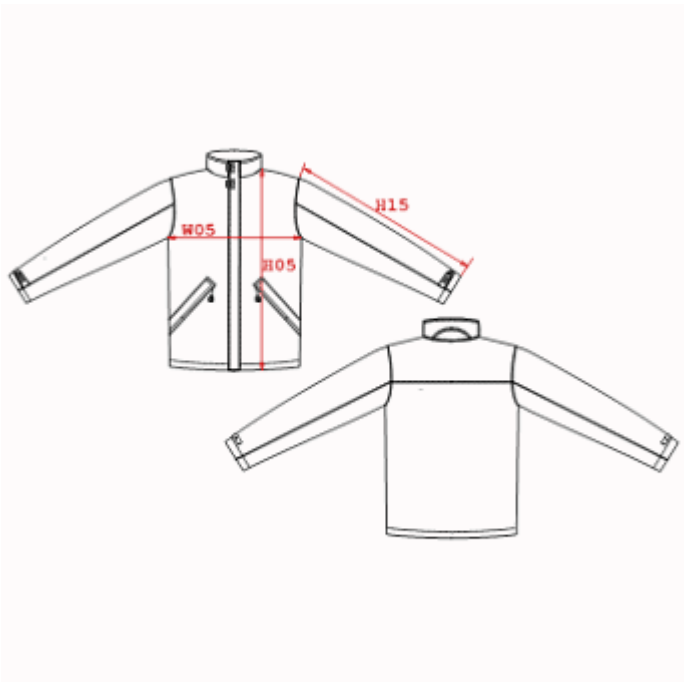

MEASUREMENT

Description	XS	S	M	L	XL	2XL	3XL	4XL		
H05 Hauteur totale / Total height	79,95	84,95	86,95	88,95	90,95	92,95	94,95	97,70		
W051/2 largeur poitrine / 1/2 chest width	56,90	60	63	66	69	72	75	79		
H15 Longueur manche / Sleeve length	61,50	62,50	63,50	65,50	67,50	69,50	71,50	74		

PACKING

Box	10 pcs / box XS => L:58cm W:40cm H:34cm GW:10.50kg NW:9.00kg S => L:60cm W:42cm H:34cm GW:11.50kg NW:10.00kg M => L:62cm W:42cm H:34cm GW:12.50kg NW:11.00kg L => L:64cm W:44cm H:34cm GW:13.50kg NW:12.00kg XL => L:67cm W:46cm H:34cm GW:14.50kg NW:13.00kg XXL => L:68cm W:48cm H:34cm GW:15.50kg NW:14.00kg 3XL => L:70cm W:50cm H:34cm GW:16.50kg NW:15.00kg 4XL => L:70cm W:50cm H:34cm GW:17.50kg NW:16.00kg

KARIBAN

REFERENCE : K679

NAME : RECORD

SIZES : S_M_L_XL_XXL_3XL

COMPOSITION :

Main fabric : Nylon 210T AC coating 70 For dark color only 100% polyamide
Main fabric : Nylon 210T milky coating 70 For light color only 100%polyamide
Lining : Polar fleece 200 For lining 100%polyester

WEIGHT :

Main fabric : 70 gsm
Main fabric : 70 gsm
Lining : 200 gsm

FABRIC CONSTRUCTION AND FINISHING :

Size 3XL only for Black/Grey , Navy/Grey, Red/Grey, Royal blue/Black, Dark greyBlack and Beige/Black

COLORS	PANTONE SERIGRAPHIE
Black / Grey	Black / 425C
Navy / Grey	296C / 425C
Red / Grey	186C / 425C
Forest green / Beige	553C / 7535C
Royal blue / Black	287C / Black
Yellow / Grey	123C / 425C
Orange / Black	166C / Black
Dark grey / Black	432C / Black
Beige / Black	7535C / Black
Ice blue / Navy	536C / 296C

DESCRIPTION

Français :	Bodywarmer
English :	Bodywarmer
Nederlands :	Bodywarmer
Deutsch :	Bodywarmer
Español :	Bodywarmer
Italiano :	Bodywarmer
Português :	Colete

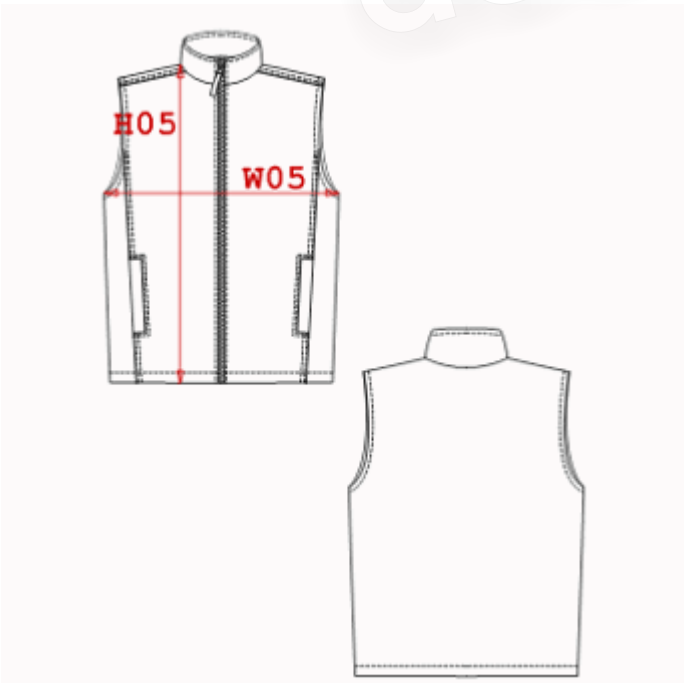

MEASUREMENT

Description	S	M	L	XL	2XL	3XL	
H05 Hauteur totale / Total height	66,50	68,50	70,50	73,25	76	78,75	
W05 1/2 largeur poitrine / 1/2 chest width	55	58	61	65	69	73	

PACKING

Box	25 pcs / box S => L:59cm W:38cm H:28cm GW:7.50kg NW:6.50kg M => L:59cm W:38cm H:28cm GW:8.50kg NW:7.00kg L => L:59cm W:38cm H:28cm GW:8.80kg NW:7.80kg XL => L:66cm W:41cm H:28cm GW:9.30kg NW:8.30kg XXL => L:66cm W:41cm H:28cm GW:9.80kg NW:8.80kg 3XL => L:70cm W:45cm H:28cm GW:10.30kg NW:9.30kg

CARE LABEL

deetex.de

KARIBAN

REFERENCE : K681

NAME : ALASKA

SIZES : S_M_L_XL_XXL_3XL_4XL

COMPOSITION :

Shell : Nylon taslon 90 100%polyamide
Lining 1 : Polar fleece 290 100% Polyester
Padding : Polyfil 180

WEIGHT :

Shell : 90 gsm
Lining 1 : 290 gsm
Padding : 180 gsm

FABRIC CONSTRUCTION AND FINISHING :

Size 4XL only for Navy/Grey, Black/Grey, Dark grey/Grey and Red/Black

COLORS	PANTONE SERIGRAPHIE
Beige / Brown	7536C / 476C
Navy / Grey	533C / 425C
Black / Grey	Black / 425C
Dark grey / Grey	432C / 425C
Green Olive / Burn Orange	Black 2C / 158C
Burnt Orange / Light Grey	158C / 422C
Red / Black	186C / Black
Dark Chocolate / Black	Black 4C / Black
Sky blue / Navy	278C / 296C
Forest green / Black	553C / Black

DESCRIPTION

Français :	Bodywarmer
English :	Bodywarmer
Nederlands :	Bodywarmer
Deutsch :	Bodywarmer
Español :	Bodywarmer
Italiano :	Bodywarmer
Português :	Colete com forro polar

deetex.de

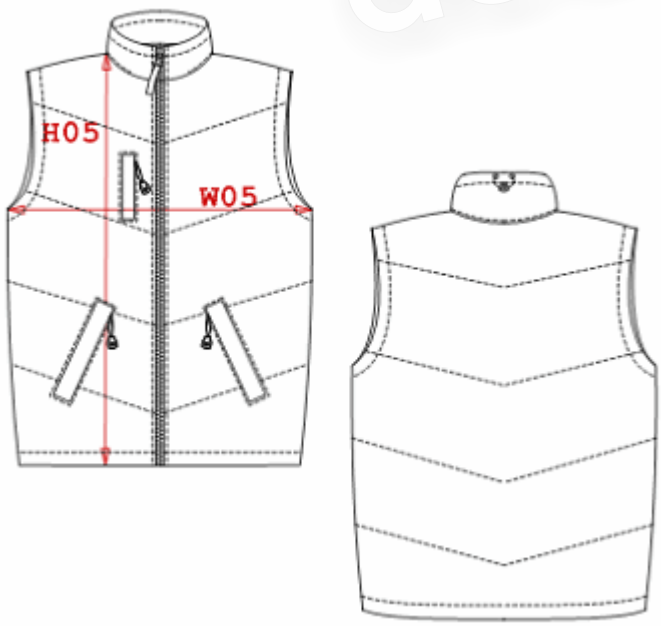

MEASUREMENT

Description	S	M	L	XL	2XL	3XL	4XL
H05 Hauteur totale / Total height	67,50	70,50	73,50	76,50	79,50	82,50	85,50
W05 1/2 largeur poitrine / 1/2 chest width	58	61	64	67	70	73	76

PACKING

Box	10 pcs / box S => L:58cm W:39cm H:44cm GW:8.50kg NW:7.00kg M => L:58cm W:39cm H:44cm GW:9.00kg NW:7.50kg L => L:64cm W:42cm H:44cm GW:9.50kg NW:8.00kg XL => L:64cm W:42cm H:44cm GW:10.00kg NW:8.50kg XXL => L:74cm W:45cm H:44cm GW:10.50kg NW:9.00kg 3XL => L:74cm W:45cm H:44cm GW:11.00kg NW:9.50kg 4XL => L:76cm W:47cm H:44cm GW:11.50kg NW:10.00kg

CARE LABEL

KARIBAN

REFERENCE : K684

NAME : PACK

SIZES : S_M_L_XL_2XL_3XL

COMPOSITION :

Main fabric : Nylon ripstop 80 100%nylon
Main fabric : Nylon ripstop 80 For contrasted yokes 100%nylon
Lining : Polytricot lining 155 For body lining and side pocket sack.
Reverse polytricot lining for sleeve lining. 100%polyester

WEIGHT :

Main fabric : 80 gsm
Main fabric : 80 gsm
Lining : 155 gsm

FABRIC CONSTRUCTION AND FINISHING :

Ripstop 2x2 With AC coating

COLORS	PANTONE SERIGRAPHIE
Red / Dark grey	186C / Cool gray 11C
Black / Red	Black / 186C
Black / Dark grey	Black / Cool gray 11C
Navy / White	296C / White
Navy / Light grey	296C / 422C
Royal blue / Light grey	287C / 422C
Orange / Dark grey	166C / Cool gray 11C

DESCRIPTION

Français :	Veste doublée bicolore
English :	Bi-color light jacket
Nederlands :	Gevoerde jas
Deutsch :	Gefütterte jacke
Español :	Cazadora forrada bicolor
Italiano :	Giacca foderata bicolore
Português :	Blusão pack

deetex.de

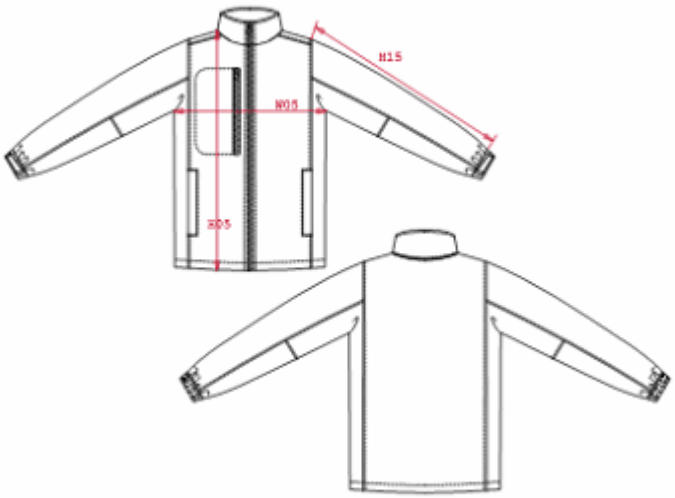

MEASUREMENT

Description	S	M	L	XL	XXL	3XL	
W05 1/2 largeur poitrine/1/2 chest width zipper included	62	65	68	71	74	78	
H05 Hauteur totale/total height	72,50	74,50	76,50	78,50	81,50	84,50	
H15 Longueur manche sans poignet/ Sleeve length without cuff	56,10	58	60	62	64	65,85	

PACKING

Box	25 pcs / box M-L => L:62cm W:42cm H:38cm GW:17,00kg NW:16,00kg XL-XXL=> L:68cm W:48cm H:38cm GW:18,00kg NW:17,00kg

CARE LABEL

KARIBAN

REFERENCE : K687

NAME : EAGLE

SIZES : S_M_L_XL_XXL_3XL_4XL

COMPOSITION :

Main fabric : Nylon 210T AC coating 70 For dark colors only 100%polyamide
Main fabric : Nylon 210T milky coating 70 For light colors only 100%polyamide
Lining 1 : Jersey 130 For body lining 100%polyester
Lining 2 : Lining 210T For sleeve lining 100%polyester

WEIGHT :

Main fabric : 70 gsm
Main fabric : 70 gsm
Lining 1 : 130 gsm
Lining 2 : 60 gsm

FABRIC CONSTRUCTION AND FINISHING :

Size 4XL only for Black, Navy, Red, and Dark grey Acrylic coating

COLORS	PANTONE SERIGRAPHIE
Black	Black
Navy	296C
Red	186C
Dark grey	432C
Orange	166C
Sky blue	543C
Yellow	123C
Light royal blue	301C
Forest green	5535C

DESCRIPTION

Français :	Coupe-vent doublé
English :	Lined windbreaker
Nederlands :	Gevoerde windbreaker
Deutsch :	Gefütterte Windjacke
Español :	Cortaviento forrado
Italiano :	Giacca a vento foderato
Português :	Corta vento com forro

leetex.de

CARE LABEL

MEASUREMENT

Description	S	M	L	XL	2XL	3XL	4XL
H05 Hauteur totale / Total height	77,15	79,15	81,15	83,15	85,90	88,65	91,40
W05 1/2 chest width	58	61	64	67	71	75	79
H15 Sleeve length with cuff	62,50	64,50	66,50	68,50	70,70	72,90	75,10

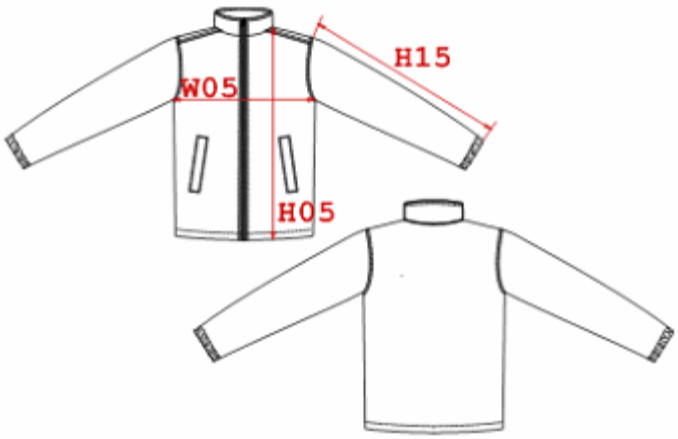

PACKING

Box	25 pcs / box S => L:66cm W:46cm H:17cm GW:11.00kg NW:9.50kg M => L:66cm W:46cm H:17cm GW:11.50kg NW:10.00kg L => L:66cm W:46cm H:17cm GW:12.00kg NW:10.50kg XL => L:76cm W:54cm H:17cm GW:12.50kg NW:11.00kg XXL => L:76cm W:54cm H:17cm GW:13.00kg NW:11.50kg 3XL => L:76cm W:54cm H:17cm GW:13.50kg NW:12.00kg 4XL => L:76cm W:56cm H:17cm GW:14.00kg NW:12.50kg

KARIBAN

REFERENCE : K693

NAME : FACTORY

SIZES : S_M_L_XL_XXL_3XL

COMPOSITION :

Main fabric : Polyester PVC coating 280 100%polyester
Main fabric : Polyester PVC coating 280 For contrasted yokes 100%polyester
Lining 2 : Lining 210T For padded lining 100%polyester
Wad 1 : Polyfil 135 For padded lining on body and sleeves, and inner piping pockets 100% Polyester

WEIGHT :

Main fabric : 280 gsm
Main fabric : 280 gsm
Lining 2 : 60 gsm
Wad 1 : 135 gsm

FABRIC CONSTRUCTION AND FINISHING :

with PVC coating Waterproof 4000 MM.

COLORS	PANTONE SERIGRAPHIE
Black / Red	Black / 186C
Black / Black	Black / Black
Red / Red	186C / 186C
Navy / Navy	296C / 296C
Dark grey / Dark grey	432C / 432C

DESCRIPTION

Français :	Parka avec doublure matelassée
English :	Padded parka jacket
Nederlands :	Gepolsterte parkajacke mit wasserdichte nahter
Deutsch :	Parka mit gestepptem futter
Español :	Parka de forro acolchado
Italiano :	Parka per uomo
Português :	Blusão com mangas amovíveis

deetex.de

CARE LABEL

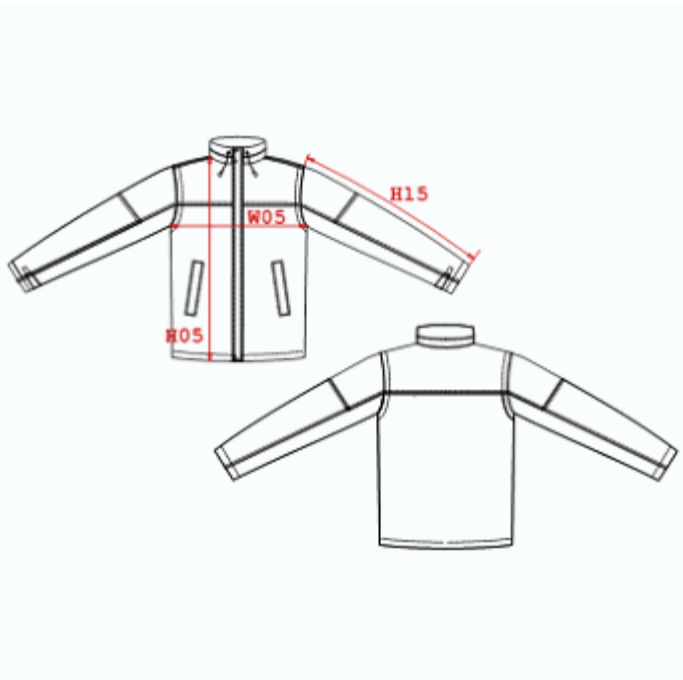

MEASUREMENT

Description	S	M	L	XL	XXL	3XL	
H05 Hauteur totale / Total height	77,45	79,45	81,50	83,50	85,50	88,30	
W05 1/2 largeur poitrine / 1/2 chest width	58,80	61,50	64,50	67,50	70,50	74,50	
H15 Longueur manche / Sleeve length	66,90	68,80	70,90	72,90	74,90	77,10	

PACKING

Box	10 pcs / box S => L:60cm W:40cm H:40cm GW:11.90kg NW:10.50kg M => L:60cm W:40cm H:40cm GW:12.80kg NW:11.40kg L => L:64cm W:40cm H:40cm GW:14.10kg NW:12.30kg XL => L:64cm W:40cm H:40cm GW:15.20kg NW:13.20kg XXL => L:66cm W:42cm H:40cm GW:16.20kg NW:14.00kg 3XL => L:66cm W:42cm H:40cm GW:17.00kg NW:14.90kg

KARIBAN

REFERENCE : K696

NAME : PARKA KIDS

SIZES : 4/6_8/10_10/12_12/14

COMPOSITION :

Shell : Polyester oxford 250 With PVC coating 100%polyester
Lining 2 : Lining 210T For padded lining 100%polyester
Lining : Polar fleece 300 For inner collar 100%polyester
Wad 1 : Polyfil 165 For padded inner body 100%polyester
Wad 2 : Polyfil 120 For padded inner sleeves 100%polyester

WEIGHT :

Shell : 250 gsm
Lining 2 : 60 gsm
Lining : 300 gsm
Wad 1 : 165 gsm
Wad 2 : 120 gsm

FABRIC CONSTRUCTION AND FINISHING :

with PVC coating Polyester oxford

COLORS	PANTONE SERIGRAPHIE
Navy	296C
Black	Black
Red	186C

DESCRIPTION

Français :	Parka avec doublure matelassée
English :	Padded parka jacket
Nederlands :	Gepolsterte parkajacke mit wasserdichte nahter
Deutsch :	Parka mit gestepptem futter
Español :	Parka de forro acolchado
Italiano :	Parka per uomo
Português :	Parka de criança

deetex.de

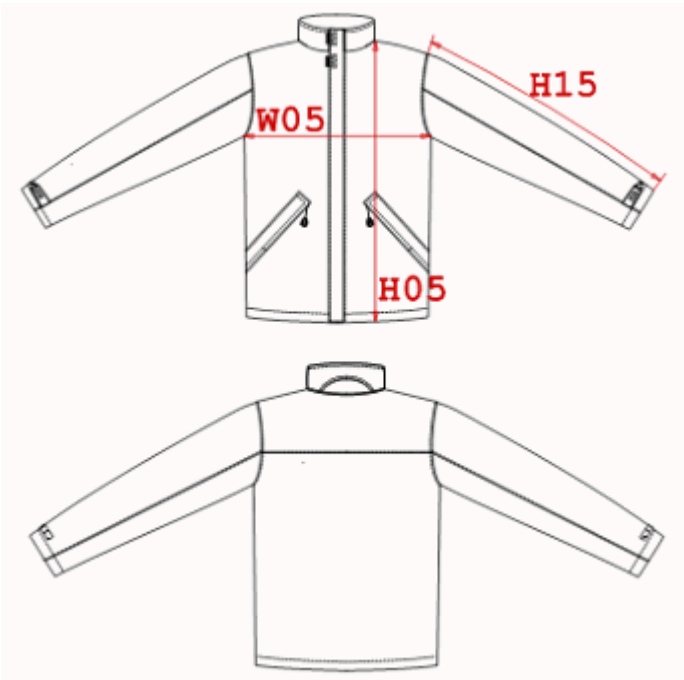

MEASUREMENT

Description	4/6	8/10	10/12	12/14			
H05 Hauteur totale / Total height	61,60	70,80	73,15	77,50			
W05 1/2 largeur poitrine / 1/2 chest width	44,80	48	51	54			
H15 Longueur manche / Sleeve length	43	51	55	57,50			

PACKING

Box	10 pcs / box 4/6 => L:45cm W:30cm H:34cm GW:8kg NW:7kg 8/10=> L:48cm W:35cm H:34cm GW:9kg NW:8kg 10/12 => L:50cm W:37cm H:34cm GW:10kg NW:9kg 12/14 => L:55cm W:39cm H:cm34 GW:11.6kg NW:10.3kg

CARE LABEL

KARIBAN

REFERENCE : K700

NAME :

SIZES : XS_S_M_L_XL_XXL_3XL_4XL

COMPOSITION :

Main fabric : Brushed Cotton / Polyester fleece 300
80%cotton / 20%polyester

COLORS	PANTONE SERIGRAPHIE
White	White
Black	Black
Navy	296C
Oxford grey	Cool gray 6C

WEIGHT :

Main fabric : 300 gsm

DESCRIPTION

Français :	Pantalon homme
English :	Men's jog pants
Nederlands :	Jogging broek
Deutsch :	Herren jogging hose
Español :	Pantalón felpa
Italiano :	Pantaloni uomo
Português :	Calças de treino

CARE LABEL

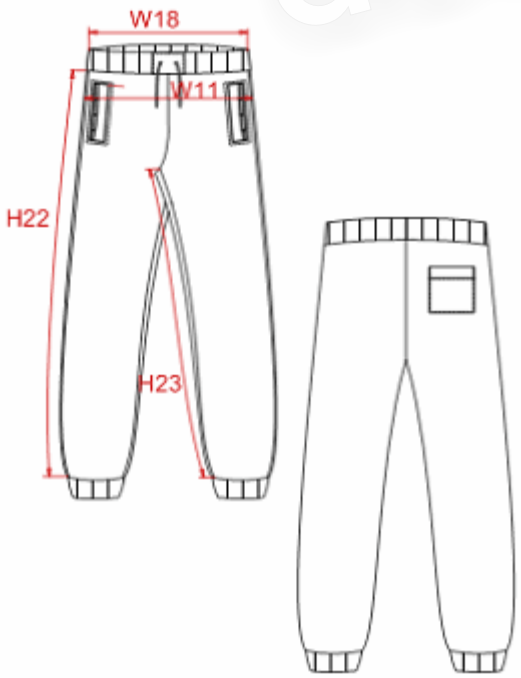

MEASUREMENT

Description	XS	S	M	L	XL	2XL	3XL	4XL		
W181/2 taille élastiquée / 1/2 elasticated waistband	28	31	34	37	40	43	47	51		
W111/2 bassin / 1/2 hip width	46	49	52	55	58	61	65	69		
H22 Longueur côté sans ceinture et BC bas / Side leg length without waistband and rib bottom	94	96	98	100	102	104	106,25	108,50		
H23 Longueur entrejambe sans ceinture et BC bas / Inside leg length without waistband and rib bottom	74,75	76	77,30	78,60	79,85	81,15	82,45	83,75		

PACKING

Box	20 pcs / box XS => L:55cm W:37.8cm H:36cm GW:11.00kg NW:9.35kg S => L:55cm W:37.8cm H:42cm GW:11.70kg NW:10.15kg M => L:55cm W:37.8cm H:42cm GW:12.50kg NW:10.95kg L => L:55cm W:37.8cm H:42cm GW:13.10kg NW:11.55kg XL => L:55cm W:37.8cm H:42cm GW:13.65kg NW:12.10kg XXL => L:60cm W:37.8cm H:42cm GW:14.3kg NW:12.75kg 3XL => L:65cm W:37.8cm H:45cm GW:15.4kg NW:13.75kg 4XL => L:65cm W:37.8cm H:45cm GW:16.2kg NW:14.55kg

KARIBAN

REFERENCE : K770

NAME : BERMUDA

SIZES : S_M_L_XL_XXL_3XL

COMPOSITION :
Main fabric : Cotton twill 275 100%cotton

COLORS	PANTONE SERIGRAPHIE
Navy	296C
Beige	Warm gray 9C
White	White

WEIGHT :
Main fabric : 275 gsm

FABRIC CONSTRUCTION AND FINISHING :
108x56 / 16x12 Garment washed

DESCRIPTION

Français :	Bermuda
English :	Bermuda shorts
Nederlands :	Bermuda
Deutsch :	Bermuda
Español :	Bermudas
Italiano :	Bermuda
Português :	Bermuda homem

MEASUREMENT

Description	S	M	L	XL	2XL	3XL	
W03 Longueur taille élastiquée / Elasticated waist length	32	34	37	39	41,50	43	
W11 1/2 bassin / 1/2 hip width	50	53	56	59	62	66	
H22 Longueur côté / Side length	45,50	47,25	49	50,75	52,50	54,25	
H23 Longueur entrejambe / Inside leg length	23,50	24,50	25,50	26,50	27,50	28,50	

PACKING

Box	25 pcs / box S => L:59cm W:37cm H:25cm GW:11.10kg NW:8.60kg M => L:59cm W:37cm H:25cm GW:11.30kg NW:8.80kg L => L:59cm W:37cm H:25cm GW:11.50kg NW:9.00kg XL => L:59cm W:37cm H:25cm GW:11.80kg NW:9.30kg 2XL => L:59cm W:37cm H:25cm GW:12.00kg NW:9.50kg 3XL => L:59cm W:37cm H:25cm GW:12.30kg NW:9.80kg

CARE LABEL

deetex.de

KARIBAN

REFERENCE : K771

NAME : BACKPACK

SIZES : S_M_L_XL_XXL

COMPOSITION :
Main fabric : Cotton / Nylon 120 70%cotton / 30%polyamide

COLORS	PANTONE SERIGRAPHIE
Navy	532C
Beige	465C

WEIGHT :
Main fabric : 120 gsm

DESCRIPTION

Français :	Pantalon bermuda 2 en 1
English :	Zip off trousers
Nederlands :	2 in 1 bermuda / broek
Deutsch :	2 en 1 hose / short
Español :	Pantalón / bermuda 2 en 1
Italiano :	Pantaloni / bermuda 2 in 1
Português :	Calça Backpack

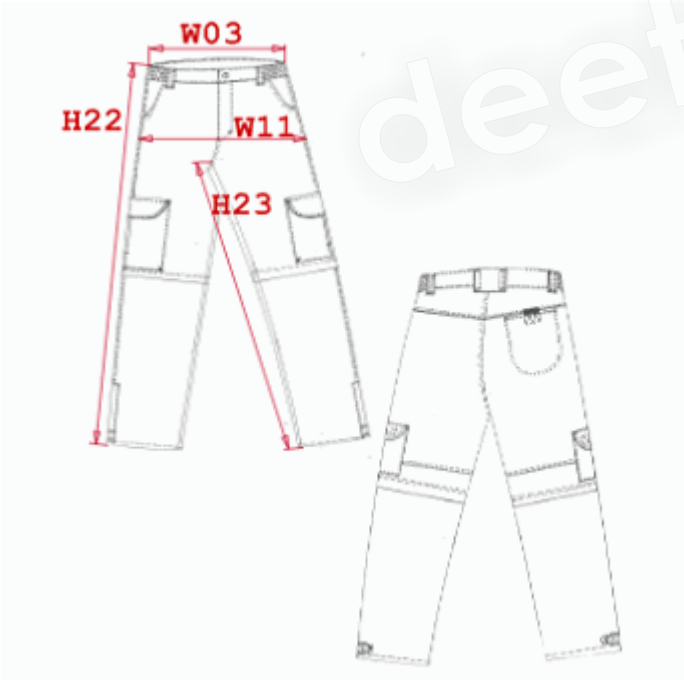

MEASUREMENT

Description	S	M	L	XL	2XL		
W03 1/2 largeur taille élastiquée / 1/2 elasticated waist width	36	38	40	43	46		
W11 1/2 bassin / 1/2 hip width	49	52	55	58	61		
H22 Longueur côté / Side length	100,75	103,50	106,50	109	111,75		
H23 Longueur entrejambe / Inside leg length	77,50	79,50	81,50	83,50	85,50		

PACKING

Box	20 pcs / box S-XXL => L:62cm W:36cm H:20cm GW:9.50kg NW:8.50kg

CARE LABEL

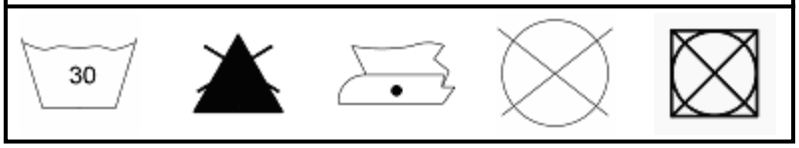

deetex.de

KARIBAN

REFERENCE : K772

NAME : CHINO

SIZES : 38_40_42_44_46_48_50_52

COLORS	PANTONE SERIGRAPHIE
Navy	296C
Beige	7530C

COMPOSITION :

Main fabric : Peached cotton twill 285 100%cotton
Main fabric : Peached cotton twill 285 For contrasted inner waistband 100%cotton

WEIGHT :

Main fabric : 285 gsm
Main fabric : 285 gsm

FABRIC CONSTRUCTION AND FINISHING :

Peached finish - Garment washed

DESCRIPTION

Français :	Pantalon coupe droite
English :	Trousers right cut
Nederlands :	Broek met rechte snit
Deutsch :	Gerade geschnittene hose
Español :	Pantalón corte recto
Italiano :	Pantaloni taglio diritto
Português :	Calças Chino

MEASUREMENT

Description	38	40	42	44	46	48	50	52		
W03 1/2 ceinture / 1/2 waist length	39	41	43	45	47	49	51	53		
W11 1/2 bassin à 18cm de la ceinture non comprise / 1/2 hip width at 18cm from waist not included	51	53	55	57	59	61	63	65		
H22 Longueur côté / Side length	102	104,5 0	107	107,5 0	110	110,5 0	113	113,5 0		
H23 Longueur entrejambe / Inside leg length	80	82	84	84	86	86	88	88		

PACKING

Box	20 pcs / box 38-52 => L:62cm W:37cm H:25cm GW:13.80kg NW:12.00kg

CARE LABEL

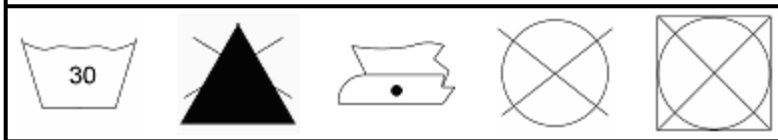

deetex.de

KARIBAN

REFERENCE : K777

NAME : TREKKER

SIZES : 38_40_42_44_46_48_50_52_54_56_58

COMPOSITION :
Main fabric : Cotton twill 240 100%cotton

COLORS	PANTONE SERIGRAPHIE
Navy	296C
Dark grey	432C
Black	Black
Light mastic	7531C

WEIGHT :
Main fabric : 240 gsm

FABRIC CONSTRUCTION AND FINISHING :
Garment washed

DESCRIPTION

Français :	Bermuda multipoches
English :	Bermuda shorts
Nederlands :	Bermuda met vele zakken
Deutsch :	Mehrere taschen short
Español :	Bermuda multibolsillos
Italiano :	Bermuda multitasche
Português :	Bermuda Trekker

MEASUREMENT

Description	38	40	42	44	46	48	50	52	54	56	58	
W03 1/2 largeur taille / 1/2 waist width	38,50	40,50	42,50	44,50	46,50	48,50	50,50	52,50	54,50	56,50	58,50	
W11 1/2 bassin / 1/2 hip width	52	54	56	58	60	62	64	66	68	70	72	
H22 Longueur côté / Side length	55	56,50	57	58,50	60	61,50	62	62,50	64	64,50	65	
H23 Longueur entrejambe / Inside leg length	32,75	33,75	33,75	34,75	35,75	36,75	36,75	36,75	37,75	37,75	37,75	

PACKING

Box	25 pcs / box 38-58 => L:60cm W:40cm H:20cm GW:10.50kg NW:8.20kg

CARE LABEL

deetex.de

KARIBAN

REFERENCE : K784

NAME : SAFARI PANTS

SIZES : S_M_L_XL_XXL_3XL

COMPOSITION :
Main fabric : Canvas 215 100%cotton

COLORS	PANTONE SERIGRAPHIE
Navy	296C
Beige	466C
Black	Black

WEIGHT :
Main fabric : 215 gsm

FABRIC CONSTRUCTION AND FINISHING :
94x48 / 32 / 2x16 Garment washed

DESCRIPTION

Français :	Pantalon reporter
English :	Safari pants
Nederlands :	Reportersbroek
Deutsch :	Safari pants
Español :	Pantalón
Italiano :	Pantaloni reporter
Português :	Calças Safari

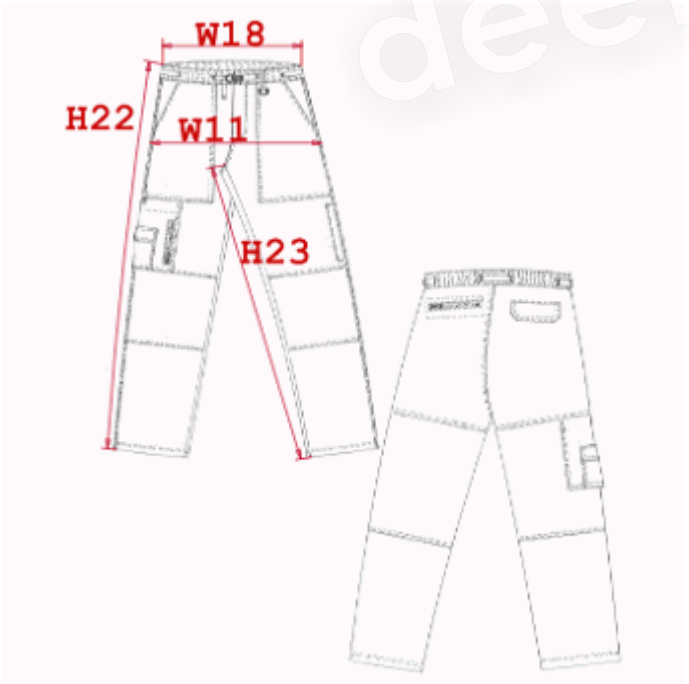

MEASUREMENT

Description	S	M	L	XL	2XL	3XL	
W18 1/2 taille élastiquée / 1/2 elasticated waist	32	34	37	39	41	43	
W11 1/2 bassin à 18cm de la ceinture non comprise / 1/2 hip width at 18cm from waist not included	49	52	55	58	61	65	
H22 Longueur côté / Side length	101,25	103	104,75	106,50	108,25	109	
H23 Longueur entrejambe / Inside leg length	80	81	82	83	84	84	

PACKING

Box	20 pcs / box S-3XL => L:61cm W:38cm H:26cm GW:14.40kg NW:12.90kg

CARE LABEL

deetex.de

KARIBAN

REFERENCE : K786

NAME : BEACH PANTS

SIZES : S_M_L_XL_XXL

COMPOSITION :
Main fabric : Cotton sheeting 145 100%cotton

COLORS	PANTONE SERIGRAPHIE
Beige	7529C

WEIGHT :
Main fabric : 145 gsm

DESCRIPTION

Français :	Pantalon léger
English :	Light trousers
Nederlands :	Lichte hose
Deutsch :	Leichte hose
Español :	Pantalones ligeros
Italiano :	Pantalone leggero
Português :	Calça ligeira

MEASUREMENT

Description	S	M	L	XL	XXL		
W03 1/2 longueur taille élastiqué / 1/2 elasticated waist length	32	35	38	41	44		
W11 1/2 bassin / 1/2 hip width	50,10	52,95	55,85	58,80	61,70		
H22 Longueur côté / Side length	106,50	107,25	108	110,75	111,50		
H23 Longueur entrejambe / Inside leg length	84	84	84	86	86		

PACKING

Box	20 pcs / box All size => L:60cm W:40cm H:15cm GW:7.50kg NW:6.50kg

CARE LABEL

decatex.de

KARIBAN

REFERENCE : K787

NAME : DIANE

SIZES : 36_38_40_42_44

COLORS	PANTONE SERIGRAPHIE
Khaki	Black 4C

COMPOSITION :
Main fabric : Cotton poplin 135 100%cotton

WEIGHT :
Main fabric : 135 gsm

FABRIC CONSTRUCTION AND FINISHING :
Garment washed

DESCRIPTION

Français :	Short femme
English :	Ladies short
Nederlands :	Dames short
Deutsch :	Damen short
Español :	Short para mujer
Italiano :	Shot donna
Português :	Calcão de senhora

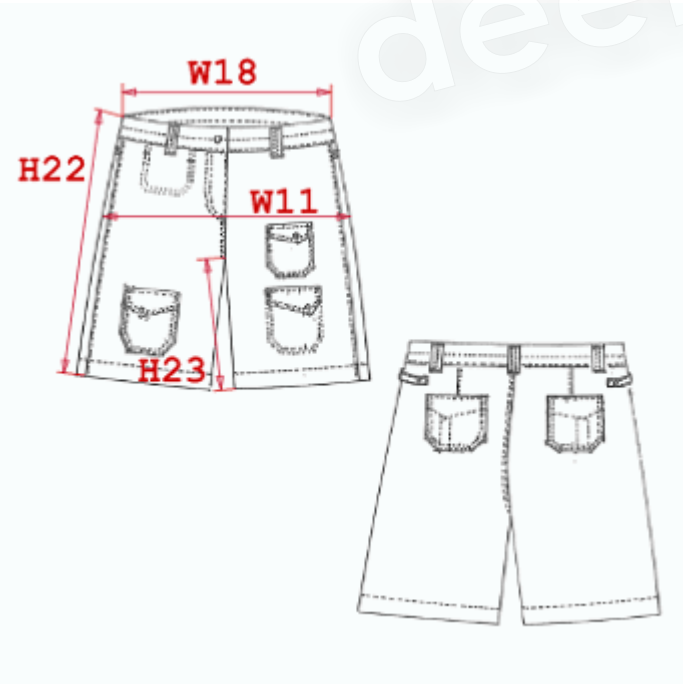

MEASUREMENT

Description	36	38	40	42	44		
W18 1/2 ceinture / 1/2 waist length	37,75	39,75	41,75	43,75	45,75		
W11 1/2 bassin / 1/2 hip width	47	49	51	53	55		
H22 Longueur côté / Side length	35,75	36,25	36,75	37,25	37,75		
H23 Longueur entrejambe / Inside leg length	16,50	16,50	16,50	16,50	16,50		

PACKING

Box	25 pcs / box 36-44 => L:46cm W:37cm H:15cm GW:6.50kg NW:5.50kg

CARE LABEL

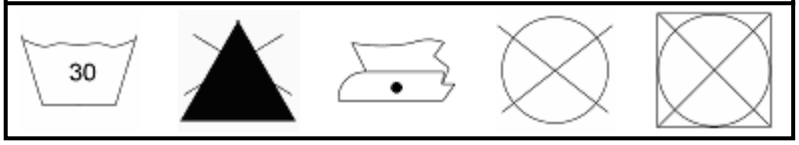

deetex.de

REFERENCE : K788

NAME : JEAN

SIZES : 38_40_42_44_46_48_50_52_54_56

COLORS	PANTONE SERIGRAPHIE
Jean	Jean

COMPOSITION :
Main fabric : Denim 480 13½ oz 100%cotton

WEIGHT :
Main fabric : 480 gsm

FABRIC CONSTRUCTION AND FINISHING :
Double stone washed

DESCRIPTION

Français :	Jean 5 poches homme délavé
English :	Stonewashed 5 pocket jean
Nederlands :	Afgewassen jeans met 5 zakken
Deutsch :	Verwashene 5 tashen herren
Español :	Pantalón vaquero 5 bolsillos efecto deseñido
Italiano :	Jean 5 tasche uomo vintage
Português :	Calças jeans pré lavadas

CARE LABEL

MEASUREMENT

Description	38	40	42	44	46	48	50	52	54	56
W031/2 largeur ceinture / 1/2 waist width	41	43	45	47	49	51	53	55	57	58
W111/2 bassin / 1/2 hip width	50	52	54	56	58	60	62	64	66	68
H23 Longueur entrejambe / Inside leg length	87	87	87	87	87	87	88	88	88	88

PACKING

Box	15 pcs / box 38 => L:65cm W:38cm H:32cm GW:12.4kg NW:10.9kg 40 => L:65cm W:38cm H:32cm GW:13kg NW:11.5kg 42 => L:65cm W:38cm H:32cm GW:13.3kg NW:11.8kg 44 => L:65cm W:38cm H:32cm GW:13.8kg NW:12.3kg 46 => L:65cm W:38cm H:32cm GW:13.9kg NW:12.4kg 48=> L:65cm W:38cm H:32cm GW:14.5kg NW:12.9kg 50=> L:65cm W:38cm H:32cm GW:15kg NW:13.5kg 52=> L:65cm W:38cm H:32cm GW:15.2kg NW:13.7kg 54=> L:65cm W:38cm H:32cm GW:15.5kg NW:14.2kg 56=> L:65cm W:38cm H:32cm GW:15.7kg NW:14.4kg

KARIBAN

REFERENCE : K874

NAME : BANDEAU POLAIRE

SIZES : 51cm_55cm

COMPOSITION :
Main fabric : Polar fleece 200 100%polyester

COLORS	PANTONE SERIGRAPHIE
Black	Black
Navy	532C
Dark grey	432C
Natural	Cool gray 1C

WEIGHT :
Main fabric : 200 gsm

DESCRIPTION	
Français :	Bandeau polaire
English :	Fleece headband
Nederlands :	Polar hoofdband
Deutsch :	Fleece Ohrenwärmer
Español :	Cinta polar
Italiano :	Passata in pile
Português :	Banda polar

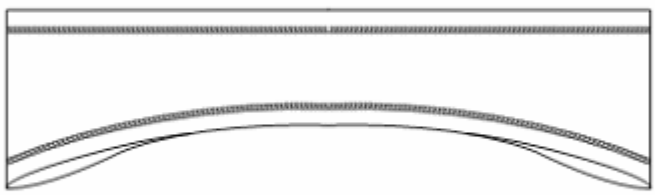

MEASUREMENT							
Description	**51cm**	**55cm**					
H10 Tour de tête / Head measurement	**51**	**55**					

PACKING	
Box	300 pcs / box 51cm => L:58cm W:38cm H:52cm GW:8.00kg NW:6.50kg 55cm => L:58cm W:38cm H:52cm GW:8.00kg NW:6.50kg

CARE LABEL

deetex.de

KARIBAN

REFERENCE : K875

NAME : TOUR DE COU

SIZES : U

COMPOSITION :
Main fabric : Polar fleece 200 100%polyester

COLORS	PANTONE SERIGRAPHIE
Black	Black
Navy	532C
Dark grey	432C
Natural	Cool gray 1C

WEIGHT :
Main fabric : 200 gsm

DESCRIPTION	
Français :	Tour de cou en polaire
English :	Fleece neck warmer
Nederlands :	Polar sjaal
Deutsch :	Fleece Nackenwärmer
Español :	Cuello polar
Italiano :	Girocollo in pile
Português :	Banda polar para pescoço

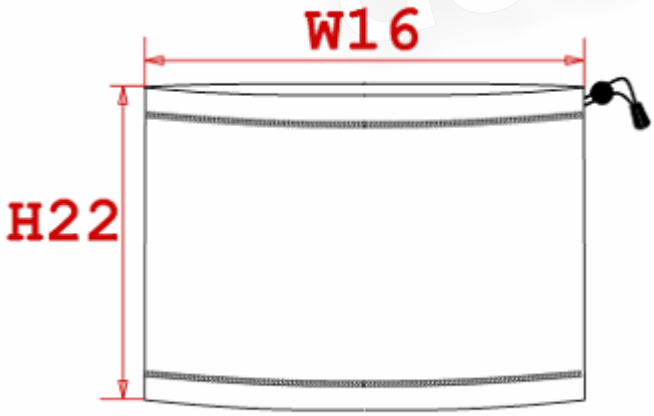

MEASUREMENT							
Description	**U**						
H22 Hauteur du tour de cou / Neck warmer height	**26**						
W16 Largeur du tour de cou / Neck warmer width	**29**						

PACKING	
Box	150 pcs / box U => L:58cm W:54cm H:36cm GW:8.50kg NW:7.00kg

CARE LABEL

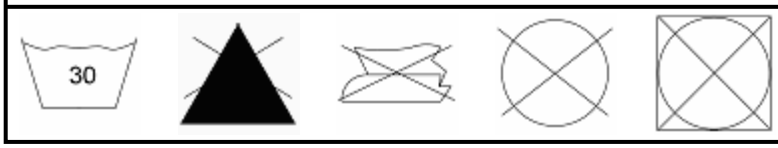

deetex.de

KARIBAN

REFERENCE : K876

NAME : GANTS POLAIRES

SIZES : S/M_L/XL

COMPOSITION :
Main fabric : Polar fleece 200 100%polyester

COLORS	PANTONE SERIGRAPHIE
Black	Black
Navy	532C
Dark grey	432C
Natural	Cool gray 1C

WEIGHT :
Main fabric : 200 gsm

DESCRIPTION

Français :	Gants en polaire
English :	Fleece gloves
Nederlands :	Polar handschoenen
Deutsch :	Fleecehandschuhe
Español :	Guantes polares
Italiano :	Guanti in pile
Português :	Luvas polar

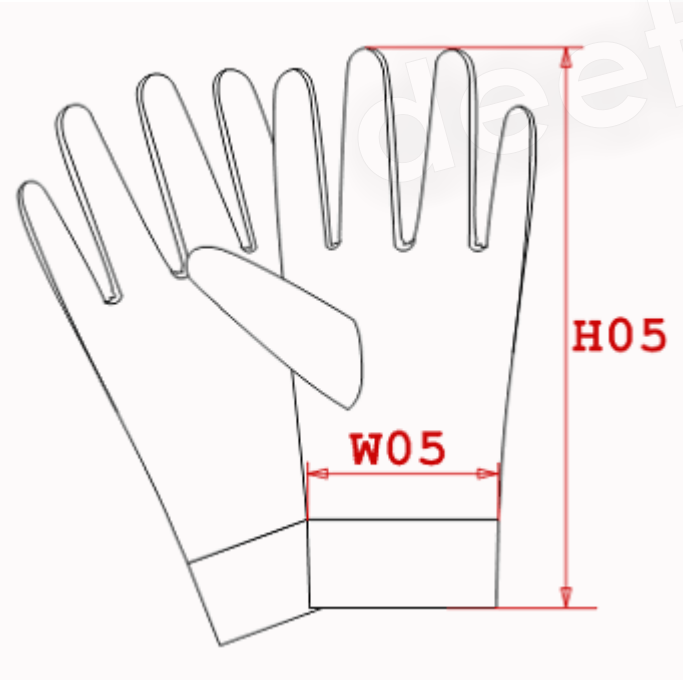

MEASUREMENT

Description	S/M	L/XL					
H05 Hauteur totale / Total height	27	29					
W05 1/2 largeur poignet / 1/2 cuff width	9,50	11,50					

PACKING

Box	200 pcs / box S/M => L:56cm W:32cm H:68cm GW:10.00kg NW:8.50kg L/XL => L:56cm W:32cm H:68cm GW:10.00kg NW:8.50kg

CARE LABEL

KARIBAN

REFERENCE : K877

NAME : BONNET POLAIRE

SIZES : 51cm_55cm

COMPOSITION :
Main fabric : Polar fleece 200 100%polyester

WEIGHT :
Main fabric : 200 gsm

COLORS	PANTONE SERIGRAPHIE
Black	Black
Navy	532C
Dark grey	432C
Natural	Cool gray 1C
Red	187C
Royal blue	287C

DESCRIPTION

Français :	Bonnet polaire
English :	Fleece hat
Nederlands :	Polar muts
Deutsch :	Fleece Mütze
Español :	Gorro polar
Italiano :	Cappello in pile
Português :	Gorro polar

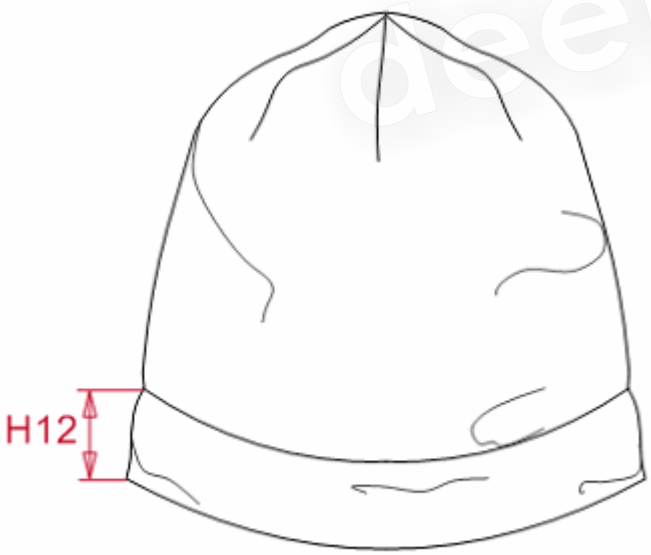

MEASUREMENT

Description	51cm	55cm					
W15 Tour de tête / Head measurement	51	55					
H12 Hauteur finition bonnet / Hat finishing height	5,50	5,50					

PACKING

Box	200 pcs / box 51cm => L:58cm W:56cm H:36cm GW:8.50kg NW:6.60kg 55cm => L:58cm W:56cm H:36cm GW:8.50kg NW:6.60kg

CARE LABEL

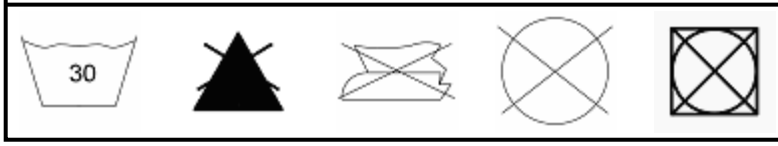

KARIBAN

REFERENCE : K878

NAME : ECHARPE POLAIRE

SIZES : U

COMPOSITION :
Main fabric : Polar fleece 200 100%polyester

WEIGHT :
Main fabric : 200 gsm

COLORS	PANTONE SERIGRAPHIE
Black	Black
Navy	532C
Dark grey	432C
Natural	Cool gray 1C
Red	187C
Orange	158C
Sky blue	7695C
Royal blue	287C
Green	363C
Yellow	122C

DESCRIPTION

Français :	Echarpe polaire
English :	Fleece scarf
Nederlands :	Polar sjaal
Deutsch :	Fleece Schal
Español :	Bufanda polar
Italiano :	Sciarpa in pile
Português :	Cachecol polar

deetex.de

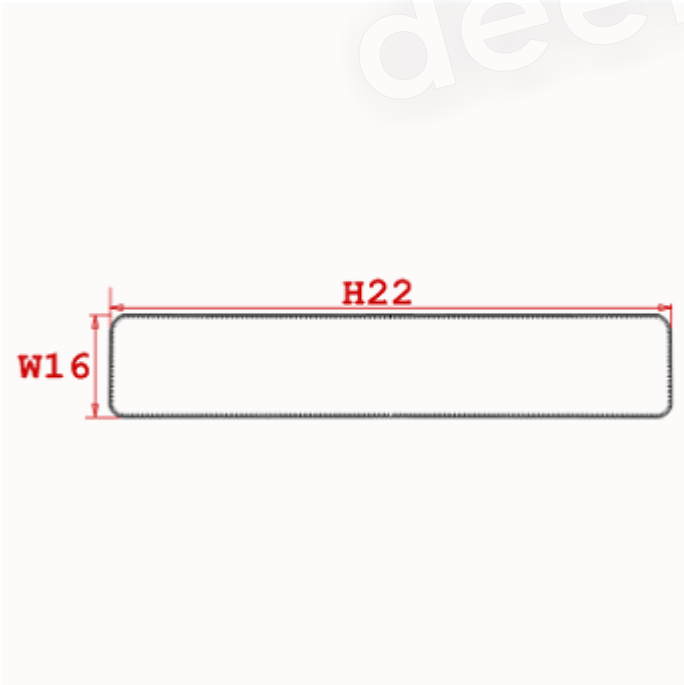

MEASUREMENT

Description	U						
H22 Longueur échape / Scarf length	180						
W16 Largeur écharpe / Scarf width	30						

PACKING

Box	100 pcs / box U => L:62cm W:47cm H:46cm GW:13.00kg NW:11.00kg

CARE LABEL

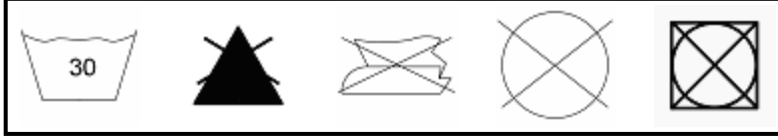

KARIBAN

REFERENCE : K885 **NAME :** APRON

SIZES : U

COMPOSITION :
Main fabric : Gabardine 280 100%cotton

WEIGHT :
Main fabric : 280 gsm

DESCRIPTION	
Français :	Tablier de sommelier
English :	Apron
Nederlands :	Kelnershort
Deutsch :	Kelner schürze
Español :	Delantal
Italiano :	Grembiule
Português :	Avental com peito

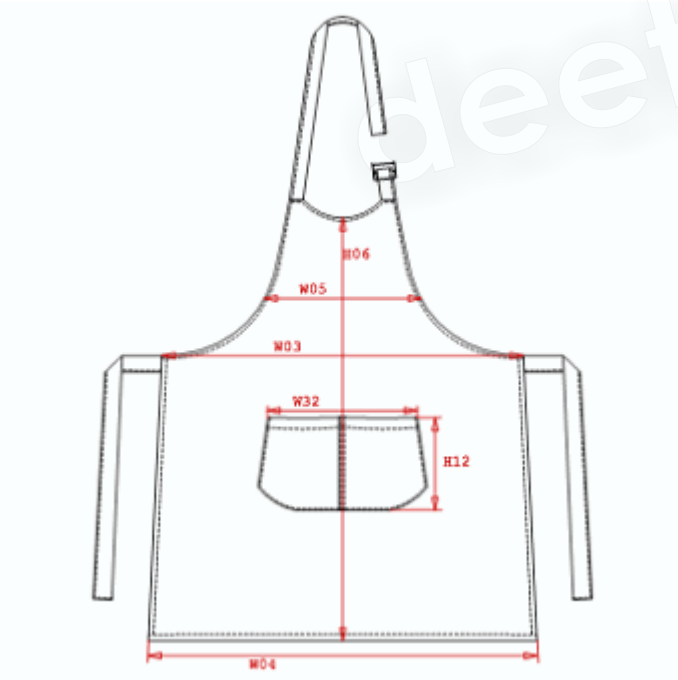

MEASUREMENT

Description	U						
H06 Hauteur milieu devant / Middle front length	90						
W03 Largeur taille / Waist width	76						
W05 Largeur poitrine / Chest width	37						
W04 Largeur bas / Bottom width	81						
H12 Hauteur poche / Pocket height	20						
W32 Largeur haut de poche devant / Top pocket width	31,50						

PACKING	
Box	50 pcs / box U => L:51cm W:42.5cm H:22cm GW:14.85kg NW:13.50kg

CARE LABEL

KARIBAN

REFERENCE : K885

NAME : APRON

SIZES : U

COMPOSITION :
Main fabric : Gabardine 280 100%cotton

WEIGHT :
Main fabric : 280 gsm

FABRIC CONSTRUCTION AND FINISHING :

COLORS	PANTONE SERIGRAPHIE
Black	Black
Wine	504C
Bottle green	567C
Beige	7530C
Burnt orange	159C
White	White
Red	1935C
Dark grey	432C
Chocolate	476C
Kelly green	340C
Navy	539C
Lagoon	2915C
Green olive	Black 2C
Yellow	123C
Royal blue	287C
Lime	367C
Light grey	422C
Dark pink	210C

deetex.de

KARIBAN

REFERENCE : K886

NAME : BARMAN APRON

SIZES : U

COMPOSITION :
Main fabric : Gabardine 280 100%cotton

COLORS	PANTONE SERIGRAPHIE
Black	Black
Wine	504C

WEIGHT :
Main fabric : 280 gsm

DESCRIPTION	
Français :	Tablier Barman
English :	Barman Apron
Nederlands :	Kelnerschort
Deutsch :	Kurze Barschürze
Español :	Delantal corto de barman
Italiano :	Barman Apron
Português :	Avental curto de barman

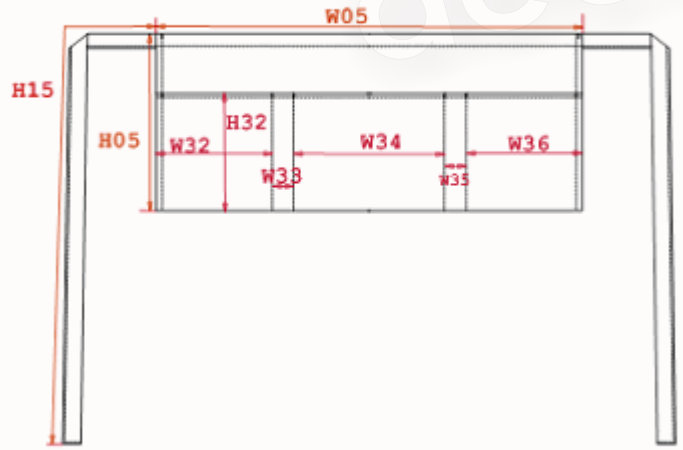

MEASUREMENT							
Description	**U**						
W05 Largeur tablier / Apron width	70						
H05 Hauteur tablier / Apron height	26						
H15 Longueur ceinture / Belt length	82						
H32 Hauteur poche / Pocket height	20						
W32 Largeur poche droite / Right pocket width	20						
W33 Largeur petite poche droite / Right small pocket width	3,50						
W34 Largeur poche milieu / Middle pocket width	22,50						
W35 Largeur petite poche gauche / Left small pocket width	6						
W36 Largeur poche gauche / Left pocket width	18						

PACKING	
Box	50 pcs / box U => L:28cm W:25cm H:30cm GW:8.20kg NW:7.20kg

CARE LABEL

deeter.de

KARIBAN

REFERENCE : K887

NAME : CAVISTE APRON

SIZES : U

COMPOSITION :
Main fabric : Gabardine 280 100%cotton

COLORS	PANTONE SERIGRAPHIE
Black	Black
Wine	504C

WEIGHT :
Main fabric : 280 gsm

DESCRIPTION	
Français :	Tablier caviste
English :	Caviste apron
Nederlands :	Lange heupschort
Deutsch :	Lange barschürze
Español :	Delantal bodeguero largo
Italiano :	Caviste apron
Português :	Avental comprido de barman

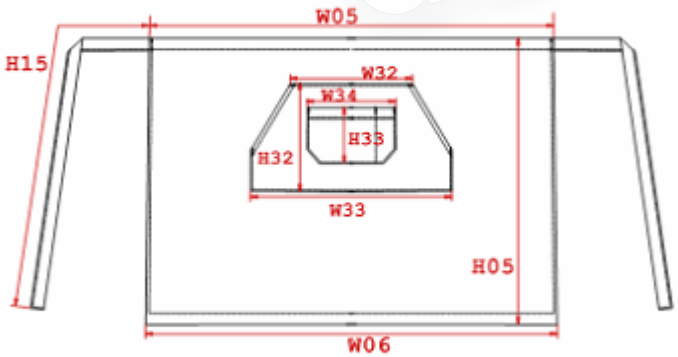

MEASUREMENT							
Description	**U**						
W05 Largeur haut du tablier / Top apron width	90						
W06 Largeur bas du tablier / Bottom apron width	92,50						
H15 Longueur ceinture / Belt length	75						
H05 Hauteur tablier / Apron height	62,50						
W32 Largeur poche haut / Top pocket width	27,50						
H32 Hauteur poche / Pocket height	24						
W33 Largeur poche bas / Bottom pocket width	46						
W34 Largeur haut petite poche / Top of small pocket width	20						
H33 Hauteur petite poche / Small pocket height	12,50						

PACKING	
Box	50 pcs / box U => L:48cm W:32cm H:25cm GW:14.45kg NW:13.00kg

CARE LABEL

deetex.de

KARIBAN

REFERENCE : K889

NAME : APRON KIDS

SIZES : U

COMPOSITION :
Main fabric : Gabardine 280 100%cotton

WEIGHT :
Main fabric : 280 gsm

COLORS	PANTONE SERIGRAPHIE
White	White
Black	Black
Navy	539C
Red	1935C
Lagoon	2915C
Lime	367C
Dark pink	210C

DESCRIPTION

Français :	Tablier enfant
English :	Kids apron
Nederlands :	Apron voor kids
Deutsch :	Kinder apron
Español :	Delantal para niño
Italiano :	Grembiule bambino
Português :	Avental de criança

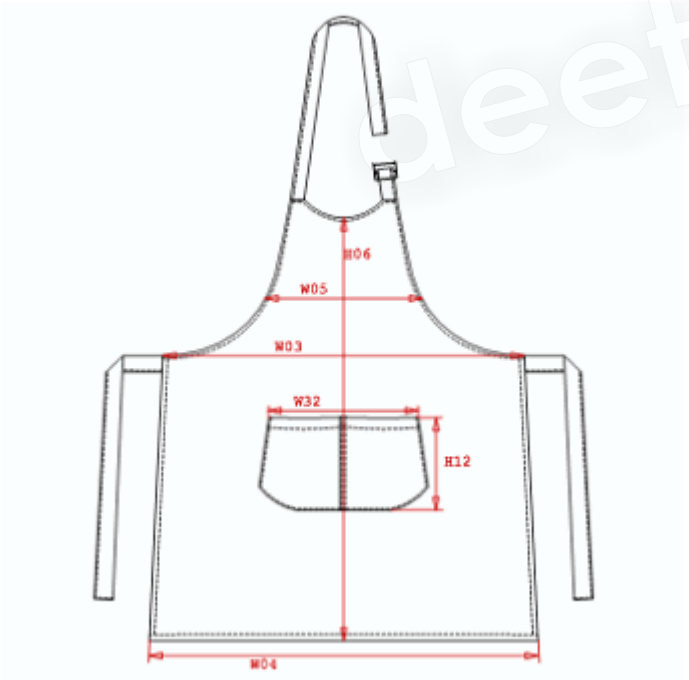

MEASUREMENT

Description	U						
H06 Hauteur milieu devant / Middle front length	60						
W03 Largeur taille / Waist width	44						
W05 Largeur poitrine à 8cm du milieu dvt / Chest width at 8cm from front middle	24						
W04 Largeur bas / Bottom width	48						
H12 Hauteur poche / Pocket height	13						
W32 Largeur haut de poche devant / Top pocket width	21						

PACKING

Box	50 pcs / box U => L:39cmcm W:26cm H:22cm GW:8.00kg NW:7.00kg

CARE LABEL

sleeflex.de

KARIBAN

REFERENCE : K906

NAME : MELODIE

SIZES : S_M_L_XL_XXL_3XL_4XL

COMPOSITION :
Main fabric : Micropolar fleece 280 100%polyester

WEIGHT :
Main fabric : 280 gsm

COLORS	PANTONE SERIGRAPHIE
Black	Black
Red	186C
Sky blue	7457C
Navy	532C
Dark chocolate	Black 4C
Natural	Cool gray 1C
Royal blue	287C
Convoy grey	Cool gray 11C

DESCRIPTION

Français :	Gilet micropolaire femme
English :	Ladies micro fleece gilet
Nederlands :	Damesvest in polar
Deutsch :	Damen fleece jacke
Español :	Chaleco micropolar para mujer
Italiano :	Gilet donna in pile
Português :	Colete de senhora em malha micropolar

MEASUREMENT

Description	S	M	L	XL	2XL	3XL	4XL
H05 Hauteur totale / Total height	58,55	60,05	61,55	63,80	66,05	68,30	70,55
W05 1/2 largeur poitrine / 1/2 chest width	47,50	49,50	51,50	54,50	57,50	60,50	63,50

PACKING

Box	20 pcs / box S => L:48cm W:33cm H:43cm GW:7.50kg NW:6.50kg M => L:48cm W:33cm H:43cm GW:7.50kg NW:6.50kg L => L:50cm W:35cm H:43cm GW:7.50kg NW:6.50kg XL => L:50cm W:35cm H:43cm GW:7.50kg NW:6.50kg XXL => L:50cm W:35cm H:43cm GW:7.50kg NW:6.50kg 3XL => L:52cm W:37cm H:43cm GW:8.00kg NW:7.00kg 4XL => L:52cm W:37cm H:43cm GW:8.00kg NW:7.00kg

CARE LABEL

KARIBAN

REFERENCE : K907

NAME : MAUREEN

SIZES : S_M_L_XL_XXL_3XL_4XL

COMPOSITION :
Main fabric : Micropolar fleece 280 100%polyester

WEIGHT :
Main fabric : 280 gsm

COLORS	PANTONE SERIGRAPHIE
Black	Black
Red	186C
Sky blue	7457C
Natural	Cool gray 1C
Dark chocolate	Black 4C
Navy	532C
Royal blue	287C
Convoy grey	Cool gray 11C

DESCRIPTION

Français :	Veste micropolaire femme
English :	Ladies micro fleece jacket
Nederlands :	Damesjak in polar
Deutsch :	Damen fleece jacke
Español :	Chaqueta micropolar para mujer
Italiano :	Giacca in pile donna
Português :	Casaco micropolar de senhora

MEASUREMENT

Description	S	M	L	XL	2XL	3XL	4XL
H05 Hauteur totale bordage compris / Total height binding included	61,55	63,05	64,55	66,80	69,05	71,30	73,55
W05 1/2 largeur poitrine / 1/2 chest width	47,50	49,50	51,50	54,50	57,50	60,50	63,50
H15 Longueur manche / Sleeve length	59,50	60,50	61,50	62,75	64,25	65,75	67,25

PACKING

Box	10 pcs / box S => L:52cm W:35cm H:29cm GW:5.00kg NW:4.00kg M => L:52cm W:35cm H:29cm GW:5.00kg NW:4.00kg L => L:54cm W:35cm H:29cm GW:5.00kg NW:4.00kg XL => L:54cm W:35cm H:30cm GW:5.00kg NW:4.00kg XXL => L:54cm W:35cm H:30cm GW:5.00kg NW:4.00kg 3XL => L:56cm W:37cm H:30cm GW:5.50kg NW:4.50kg 4XL => L:56cm W:37cm H:30cm GW:5.50kg NW:4.50kg

CARE LABEL

KARIBAN

REFERENCE : K910

NAME : BEN

SIZES : S_M_L_XL_XXL

COMPOSITION :

Main fabric : Micropolar fleece 320 100%polyester
Main fabric : Micropolar fleece 320 For contrasted yokes 100%polyester
Lining 1 : Polytricot lining 200 For front only 100%polyester

WEIGHT :

Main fabric : 320 gsm
Main fabric : 320 gsm
Lining 1 : 200 gsm

COLORS	PANTONE SERIGRAPHIE
Navy / Dark grey	532C / 447C
Dark Chocolate / Black	Black 4C / Black
Red / Black	186C / Black
Dark grey / Light grey	447C / 429C
Black / Dark grey	Black / 447C

DESCRIPTION

Français :	Veste micropolaire zippée
English :	Bi-color micro polar fleece jacket
Nederlands :	Tweekleurige microfleece jacket met rits
Deutsch :	Zweifarbige micropolar fleecejacke
Español :	Chaqueta micropolar bicolor con cremallera
Italiano :	Micropile bicolore con zip
Português :	Casaco polar bicolor

MEASUREMENT

Description	S	M	L	XL	XXL		
H05 Hauteur totale / Total height	71,30	73,45	75,60	78,55	81,50		
W05 1/2 largeur poitrine / 1/2 chest width	55,50	58,50	61,50	65,50	69,50		
H15 Longueur manche / Sleeve length	77,50	80	82,50	85,25	88		

PACKING

Box	10 pcs / box S => L:62cm W:39cm H:33cm GW:10.00kg NW:9.00kg M => L:62cm W:39cm H:33cm GW:10.00kg NW:9.00kg L => L:69cm W:42cm H:33cm GW:10.00kg NW:9.00kg XL => L:69cm W:42cm H:33cm GW:10.00kg NW:9.00kg XXL => L:69cm W:42cm H:33cm GW:10.00kg NW:9.00kg

CARE LABEL

KARIBAN

REFERENCE : K911

NAME : FALCO

SIZES : S_M_L_XL_XXL_3XL_4XL

COMPOSITION :
Main fabric : Micropolar fleece 300 100%polyester

WEIGHT :
Main fabric : 300 gsm

FABRIC CONSTRUCTION AND FINISHING :
Microfleece antipill finish

COLORS	PANTONE SERIGRAPHIE
Dark grey	447C
Black	Black
Navy	532C
Red	186C
Forest green	553C
Burnt orange	1596C
Dark chocolate	Black 4C
Beige	7536C
Green olive	Black 2C
Royal blue	287C
Convoy grey	Cool Gray 11C

DESCRIPTION

Français :	Veste micropolaire zippée
English :	Full zip fleece jacket
Nederlands :	Jas micropolair met rits
Deutsch :	Microfleece jacke
Español :	Chaqueta micropolar con cremallera
Italiano :	Giacca in micropile con zip
Português :	Casaco polar

CARE LABEL

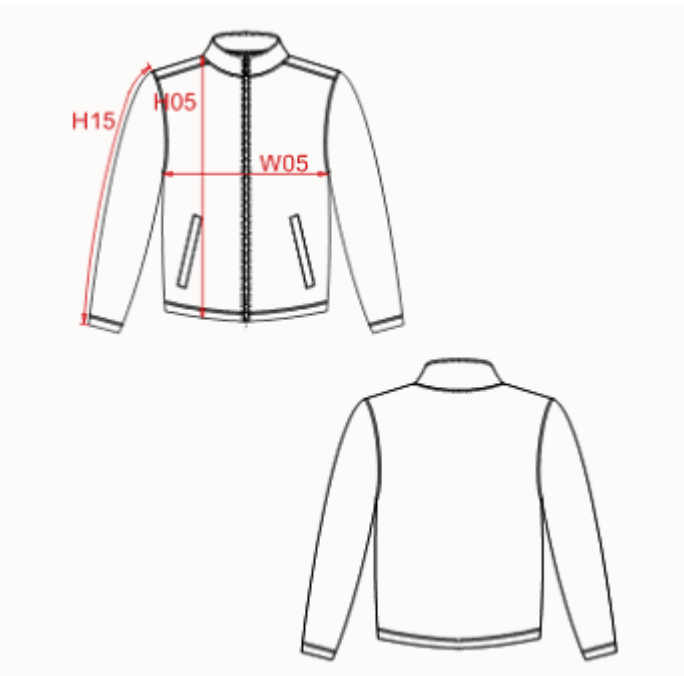

MEASUREMENT

Description	S	M	L	XL	2XL	3XL	4XL
W05 1/2 largeur poitrine avec zip / 1/2 chest width with zipper	53	56	59	62	65	69	73
H05 Hauteur totale / Total height	69,05	71,05	73,05	75,05	77,05	79,80	82,55
H15 Longueur manche / Sleeve length	63	65	67	69	71	73,25	75,50

PACKING

Box	10 pcs / box S => L:57cm W:38cm H:29cm GW:7.00kg NW:6.00kg M => L:57cm W:38cm H:29cm GW:7.00kg NW:6.00kg L => L:63cm W:40cm H:29cm GW:7.00kg NW:6.00kg XL => L:63cm W:40cm H:29cm GW:7.00kg NW:6.00kg XXL => L:68cm W:40cm H:29cm GW:7.00kg NW:6.00kg 3XL => L:68cm W:40cm H:29cm GW:7.00kg NW:6.00kg 4XL => L:70cm W:41cm H:29cm GW:7.00kg NW:6.00kg

fleetex.de

KARIBAN

REFERENCE : K912

NAME : ENZO

SIZES : S_M_L_XL_XXL_3XL_4XL

COMPOSITION :
Main fabric : Micropolar fleece 300 100%polyester

WEIGHT :
Main fabric : 300 gsm

FABRIC CONSTRUCTION AND FINISHING :
Microfleece antipill finish

COLORS	PANTONE SERIGRAPHIE
Dark grey	447C
Black	Black
Navy	532C
Red	186C
Forest green	553C
Burnt orange	1595C
Dark chocolate	Black 4C
Green olive	Black 2C
Beige	7536C
Royal blue	287C
Convoy grey	Cool Gray 11C

DESCRIPTION

Français :	Micropolaire col zippé
English :	Zip neck outdoor polarfleece
Nederlands :	Micropolair met ritskraag
Deutsch :	Zip neck micro fleece
Español :	Chaqueta micropolar con cremallera en el cuello
Italiano :	Micropile con zip
Português :	Camisola polar

CARE LABEL

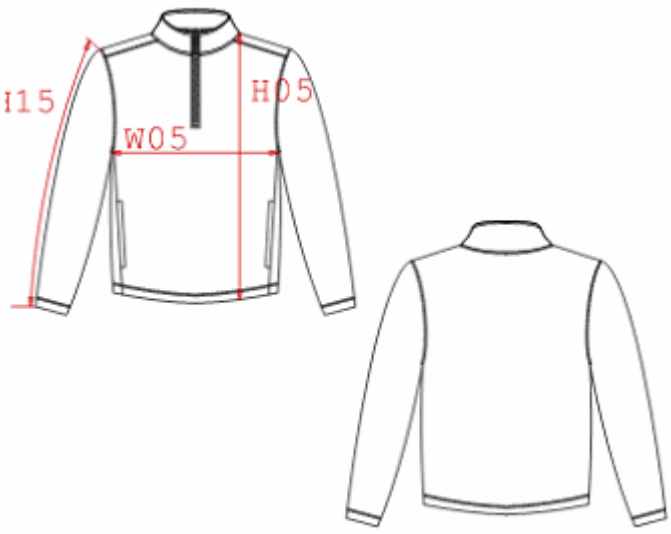

MEASUREMENT

Description	S	M	L	XL	2XL	3XL	4XL
W05 1/2 largeur poitrine / 1/2 chest width	52	55	58	61	64	68	72
H05 Hauteur totale / Total height	69	71	73	75	77	79,75	82,50
H15 Longueur manche / Sleeve length	63	65	67	69	71	73,25	75,50

PACKING

Box	10 pcs/box S => L:57cm W:38cm H:29cm GW:6.00kg NW:5.00kg M => L:57cm W:38cm H:29cm GW:6.00kg NW:5.00kg L => L:63cm W:40cm H:29cm GW:6.00kg NW:5.00kg XL => L:63cm W:40cm H:29cm GW:6.00kg NW:5.00kg XXL => L:68cm W:40cm H:29cm GW:6.00kg NW:5.00kg 3XL => L:68cm W:40cm H:29cm GW:6.00kg NW:5.00kg 4XL => L:70cm W:41cm H:29cm GW:6.00kg NW:5.00kg

fleetex.de

KARIBAN

REFERENCE : K913

NAME : LUCA

SIZES : S_M_L_XL_XXL_3XL_4XL

COMPOSITION :
Main fabric : Micropolar fleece 300 100%polyester

WEIGHT :
Main fabric : 300 gsm

FABRIC CONSTRUCTION AND FINISHING :
Microfleece antipill finish

COLORS	PANTONE SERIGRAPHIE
Dark grey	447C
Black	Black
Navy	532C
Red	186C
Forest green	553C
Burnt orange	1595C
Green olive	Black 2C
Beige	7536C
Dark chocolate	Black 4C
Royal blue	287C
Convoy grey	Cool Gray 11C

DESCRIPTION

Français :	Gilet micropolaire
English :	Fleece gilet
Nederlands :	Vest micropolair
Deutsch :	Microfleece weste
Español :	Chalequo micropolar
Italiano :	Gilet in micropile
Português :	Colete polar

CARE LABEL

MEASUREMENT

Description	S	M	L	XL	2XL	3XL	4XL
W05 1/2 largeur poitrine / 1/2 chest width	52,50	55,50	58,50	61,50	64,50	68,50	72,50
H05 Hauteur totale / Total height	68,90	70,90	72,90	74,90	76,90	79,65	82,40

PACKING

Box	10 pcs / box S => L:52cm W:35cm H:20cm GW:5.00kg NW:4.00kg M => L:52cm W:35cm H:20cm GW:5.00kg NW:4.00kg L => L:60cm W:39cm H:20cm GW:5.00kg NW:4.00kg XL => L:60cm W:39cm H:20cm GW:5.00kg NW:4.00kg XXL => L:66cm W:41cm H:20cm GW:5.00kg NW:4.00kg 3XL => L:66cm W:41cm H:20cm GW:5.00kg NW:4.00kg 4XL => L:68cm W:42cm H:20cm GW:5.00kg NW:4.00kg

fleetex.de

KARIBAN

REFERENCE : K914

NAME : SILVIO

SIZES : S_M_L_XL_XXL

COMPOSITION :

Main fabric : Micropolar fleece 320 100%polyester
Main fabric : Micropolar fleece 320 For contrasted yokes 100%polyester

WEIGHT :

Main fabric : 320 gsm
Main fabric : 320 gsm

FABRIC CONSTRUCTION AND FINISHING :

Microfleece antipilll finish

COLORS	PANTONE SERIGRAPHIE
Navy / Dark grey	532C / 447C
Black / Dark grey	Black / 447C
Dark grey / Light grey	447C / 429C
Red / Black	186C / Black
Chocolate / Black	412C / Black

DESCRIPTION

Français :	Micropolaire col zippé, bicolore
English :	Bi-colour zip neck outdoor fleece
Nederlands :	Tweekleurige micropolar met rits
Deutsch :	Zweifarbiges fleece
Español :	Chaqueta micropolar con cremallera en el cuello
Italiano :	Micropile bicolore
Português :	Camisola polar bicolor

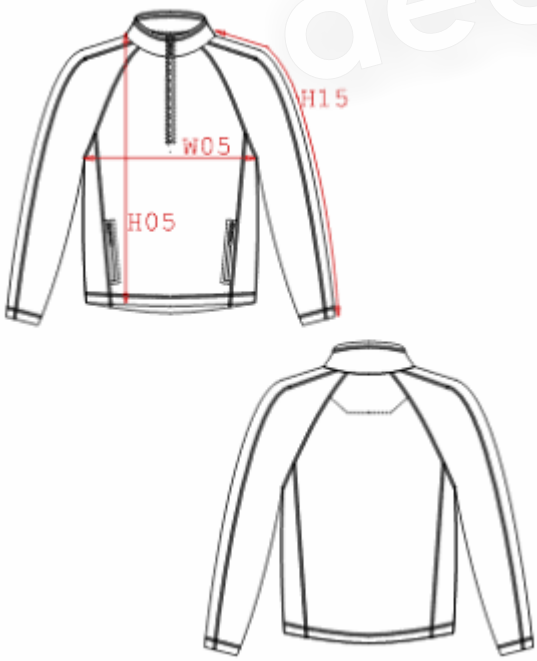

MEASUREMENT

Description	S	M	L	XL	XXL		
W05 1/2 largeur poitrine/1/2 chest width	53	56	59	62	66		
H05 hauteur totale/total height	69,40	71,50	73,65	75,75	78,75		
H15 longueur manche+épaule / Sleeve+shoulder length	76,50	79	81,50	84	86,75		

PACKING

Box	10 pcs / box S => L:54cm W:36cm H:32cm GW:7.00kg NW:6.00kg M => L:54cm W:36cm H:32cm GW:7.00kg NW:6.00kg L => L:58cm W:38cm H:32cm GW:7.00kg NW:6.00kg XL => L:58cm W:38cm H:32cm GW:7.00kg NW:6.00kg XXL => L:62cm W:40cm H:32cm GW:7.00kg NW:6.00kg

CARE LABEL

deetex.de

KARIBAN

REFERENCE : K915

NAME : DIVO

SIZES : S_M_L_XL_XXL

COMPOSITION :

Main fabric : Micropolar fleece 320 100%polyester
Main fabric : Micropolar fleece 320 For contrasted yokes 100%polyester

WEIGHT :

Main fabric : 320 gsm
Main fabric : 320 gsm

FABRIC CONSTRUCTION AND FINISHING :

Microfleece antipill finish

COLORS	PANTONE SERIGRAPHIE
Navy / Dark grey	532C / 447C
Black / Dark grey	Black / 447C
Dark grey / Light grey	447C / 429C
Red / Black	186C / Black
Chocolate / Black	412C / Black

DESCRIPTION

Français :	Gilet micropolaire bicolore
English :	Bi-colour fleece gilet
Nederlands :	Tweekleurige vest micropolair
Deutsch :	Zweifarbiges micro fleece weste
Español :	Chaleco bicolor micropolar
Italiano :	Gilet in micropile bicolore
Português :	Colete polar bicolor

MEASUREMENT

Description	S	M	L	XL	XXL		
W05 1/2 largeur poitrine/1/2 chest width	53	56	59	62	66		
H05 hauteur totale/total height	70,50	72,50	74,50	76,50	79,25		

PACKING

Box	10 pcs / box S => L:52cm W:38cm H:22cm GW:5.50kg NW:4.50kg M => L:52cm W:38cm H:22cm GW:5.50kg NW:4.50kg L => L:56cm W:40cm H:22cm GW:5.50kg NW:4.50kg XL => L:56cm W:40cm H:22cm GW:5.50kg NW:4.50kg XXL => L:60cm W:42cm H:22cm GW:5.50kg NW:4.50kg

CARE LABEL

deetex.de

KARIBAN

REFERENCE : K916

NAME : GLACIER

SIZES : S_M_L_XL_XXL

COMPOSITION :

Main fabric : Bonded micropolar fleece 370 Outer layer 100%polyester
Main fabric : Bonded micropolar fleece 370 Inner layer and contrasted collar 100%polyester
Fabric 2 : Micropolar fleece 185 For inner collar 100%polyester

WEIGHT :

Main fabric : 370 gsm
Main fabric : 370 gsm
Fabric 2 : 185 gsm

FABRIC CONSTRUCTION AND FINISHING :

Bonded polar fleece

COLORS	PANTONE SERIGRAPHIE
Grege / Dark grey	7530C / 426C
Khaki / Black	5815C / Black
Black / Grege	Black / 7530C
Burnt orange / Dark grey	1595C / 426C

DESCRIPTION

Français :	Polaire double face col zippé
English :	Half zip jacket
Nederlands :	Tweezijdig polair met ritskraag
Deutsch :	Half-Zip doppelagiges fleece-Jacket
Español :	Chaqueta micropolar con cremallera en el cuello
Italiano :	Pile double face con zip
Português :	Camisola polar com fecho

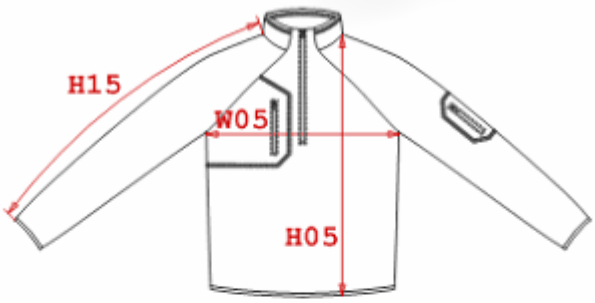

MEASUREMENT

Description	S	M	L	XL	XXL		
W05 1/2 largeur poitrine / 1/2 chest width	49	52	55	58	62		
H05 Hauteur totale / Total height	69,25	71,30	73,35	75,40	79,20		
H15 Longueur manche + épaule / Sleeve + shoulder length	74,90	77,55	80,25	82,90	86,05		

PACKING

Box	10 pcs / box S => L:54cm W:35cm H:27cm GW:7.00kg NW:6.00kg M => L:54cm W:35cm H:27cm GW:7.00kg NW:6.00kg L => L:58cm W:37cm H:27cm GW:7.00kg NW:6.00kg XL => L:58cm W:37cm H:27cm GW:7.00kg NW:6.00kg XXL => L:62cm W:39cm H:27cm GW:7.00kg NW:6.00kg

CARE LABEL

deerex.de

KARIBAN

REFERENCE : K917

NAME : MARCO

SIZES : S_M_L_XL_XXL_3XL_4XL

COMPOSITION :
Main fabric : Micropolar fleece 350 100%polyester

COLORS	PANTONE SERIGRAPHIE
Black	Black
Navy	532C

WEIGHT :
Main fabric : 350 gsm

DESCRIPTION	
Français :	Veste micropolaire zippée
English :	Full zip fleece jacket
Nederlands :	Polarvest met rits
Deutsch :	Mikrofleece-jacke
Español :	Chaqueta micropolar con cremallera
Italiano :	Giacca micro-pile con zip
Português :	Casaco micropolar

MEASUREMENT

Description	S	M	L	XL	2XL	3XL	4XL
H05 Hauteur totale / Total height	70,25	72,40	74,60	76,75	79,65	82,60	85,55
W05 1/2 largeur poitrine / 1/2 chest width	53	56	59	62	66	70	74
H15 Longueur manche / Sleeve length	77,50	80	82,50	85	87,75	90,50	93,25

PACKING

Box	10 pcs / box S => L:58cm W:38cm H:31cm GW:10.00kg NW:9.00kg M => L:58cm W:38cm H:31cm GW:10.00kg NW:9.00kg L => L:62cm W:40cm H:31cm GW:10.00kg NW:9.00kg XL => L:62cm W:40cm H:31cm GW:10.00kg NW:9.00kg XXL => L:66cm W:42cm H:31cm GW:10.00kg NW:9.00kg 3XL => L:66cm W:42cm H:31cm GW:10.00kg NW:9.00kg 4XL => L:70cm W:43cm H:31cm GW:10.00kg NW:9.00kg

CARE LABEL

KARIBAN

REFERENCE : K920

NAME : FALCO KIDS

SIZES : 6/8_8/10_10/12_12/14

COMPOSITION :
Main fabric : Polar fleece 300 100%polyester

COLORS	PANTONE SERIGRAPHIE
Black	Black
Navy	532C
Red	186C
Royal blue	287C

WEIGHT :
Main fabric : 300gsm

FABRIC CONSTRUCTION AND FINISHING :
Microfleece antipill finish

DESCRIPTION

Français :	Veste micropolaire enfant zippée
English :	Kids zip through fleece jacket
Nederlands :	Fleece vest voor kids met rits
Deutsch :	Kinder fleece jacke
Español :	Chaqueta micropolar con cremallera para niños
Italiano :	Giacca bambino in micropile con zip
Português :	Casaco micropolar de criança

MEASUREMENT

Description	6/8	8/10	10/12	12/14			
W05 1/2 largeur poitrine / 1/2 chest width	42	45	48	51			
H05 Hauteur totale / Total height	50,35	55,35	60,35	65,35			
H15 Longueur manche / Sleeve length	45,70	49,50	53,30	57,10			

PACKING

Box	10 pcs / box 6/8 => L:44cm W:30cm H:30cm GW:4.00kg NW:3.50kg 8/10 => L:44cm W:30cm H:30cm GW:4.00kg NW:3.50kg 10/12 => L:50cm W:33cm H:30cm GW:4.50kg NW:4.00kg 12/14 => L:50cm W:33cm H:30cm GW:4.50kg NW:4.00kg

CARE LABEL

deetex.de

KARIBAN

REFERENCE : K930

NAME : TOMMY

SIZES : M_L_XL_XXL

COMPOSITION :
Main fabric : Acrylic knit 18 100%acrylic

COLORS	PANTONE SERIGRAPHIE
Navy	296C
Black	Black

WEIGHT :
Main fabric : 18LBS-450gsm

FABRIC CONSTRUCTION AND FINISHING :
5GG

DESCRIPTION	
Français :	Cardigan homme zippé
English :	Men's full zip cardigan
Nederlands :	Heren vest met rits
Deutsch :	Strickjacke mit durchgehendem reissverschluss
Español :	Chaqueta con cremallera
Italiano :	Cardigan uomo con zip
Português :	Casaco de malha

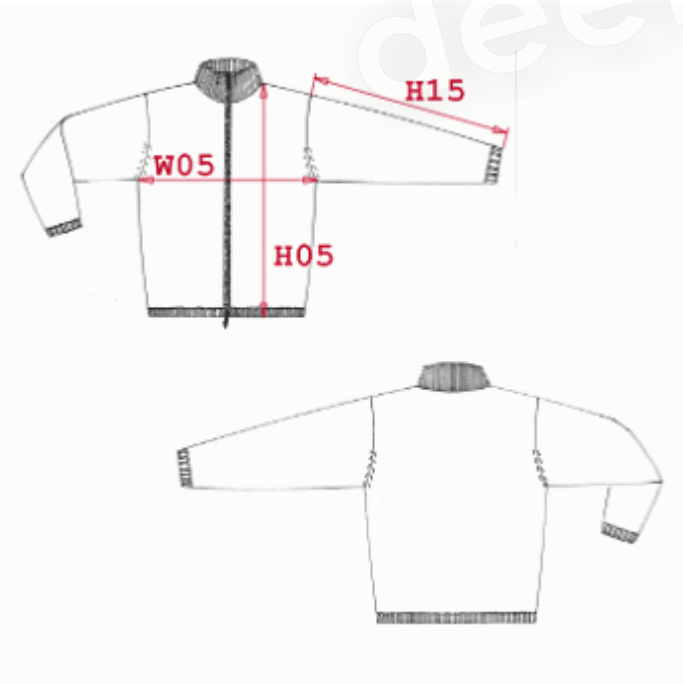

MEASUREMENT							
Description	**M**	**L**	**XL**	**2XL**			
W05 1/2 largeur poitrine / 1/2 chest width	**49**	**52**	**55**	**58**			
H05 Hauteur totale / Total height	**67,50**	**69,50**	**71,50**	**73,50**			
H15 Longueur manche / Sleeve length	**73**	**76**	**79**	**82**			

PACKING	
Box	10 pcs / box M-XXL => L:60cm W:40cm H:26cm GW:7.80kg NW:6.50kg

CARE LABEL

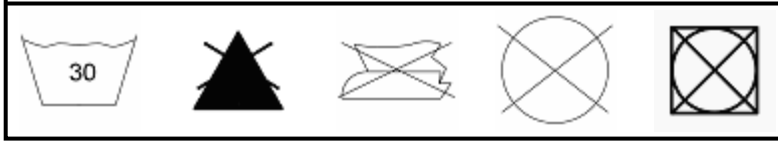

deetex.de

KARIBAN

REFERENCE : K943

NAME : PACO

SIZES : M_L_XL_XXL

COLORS	PANTONE SERIGRAPHIE
Black	Black
Navy	296C
Chocolate	4975C
Dark grey	425C

COMPOSITION :

Main fabric : Rib tricot 3x3 - 700 For body 100%cotton
Fabric 1 : Reverse jersey knit For shoulder and back yoke 100% cotton
Fabric 2 : Rib tricot 1x1 For front middle 100%cotton

WEIGHT :

Main fabric : 17LBS - 700gsm
Fabric 1 : 17LBS
Fabric 2 : 17LBS

FABRIC CONSTRUCTION AND FINISHING :

Gauge 7gg 3ply

DESCRIPTION

Français :	Pull cotelé zippé
English :	Zip neck jumper
Nederlands :	Ribtruimet rits
Deutsch :	Zip Neck Pullover
Español :	Jersey acanalado con cremallera en el cuello
Italiano :	Maglia a coste con zip
Português :	Pullover com fecho

MEASUREMENT

Description	M	L	XL	XXL			
W05 1/2 largeur poitrine/1/2 chest width	43	46	49	53			
H05 hauteur totale/total height	68	70	72	76			
H15 longueur manche / Sleeve length	64	66	68	71			

PACKING

Box	10 pcs / box M => L:57cm W:35cm H:23cm GW:7.60kg NW:6.20kg L => L:57cm W:35cm H:23cm GW:7.60kg NW:6.20kg XL => L:59cm W:37cm H:26cm GW:7.60kg NW:6.20kg 2XL => L:59cm W:37cm H:26cm GW:7.60kg NW:6.20kg

CARE LABEL

deetex.de

KARIBAN

REFERENCE : K946

NAME : FLORA

SIZES : S_M_L_XL

COLORS	PANTONE SERIGRAPHIE
Black	Black
Heather grey	421C

COMPOSITION :

Main fabric : Jersey knit Cotton/Polyamide - 5.50
70%cotton / 30%polyamide

WEIGHT :

Main fabric : 5.5LBS - 210gsm

FABRIC CONSTRUCTION AND FINISHING :

Gauge 12gg

DESCRIPTION

Français :	Pull femme encolure bateau
English :	Ladies boat neck jumper
Nederlands :	Dames pull met boothals
Deutsch :	Boat neck pullover für damen
Español :	Jersey con escote barco para mujer
Italiano :	Maglia donna scollo a barca
Português :	Camisola decote em "barco"

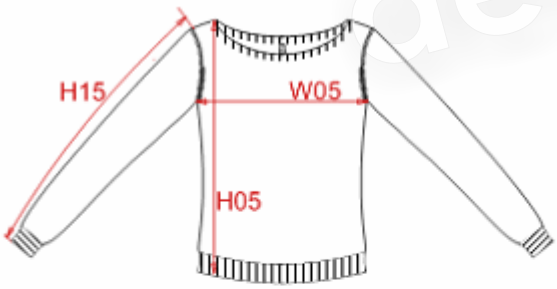

MEASUREMENT

Description	S	M	L	XL			
W05 1/2 largeur poitrine / 1/2 chest width	38	40	42	45			
H05 Hauteur totale / Total height	55,50	57	58,50	60,50			
H15 Longueur manche / Sleeve length	60	61	62	63			

PACKING

Box	10 pcs / box S-XL => L:49cm W:33cm H:12cm GW:3.00kg NW:2.50kg

CARE LABEL

deetex.de

KARIBAN

REFERENCE : K947

NAME : ELODIE

SIZES : S_M_L_XL_XXL

COMPOSITION :

Main fabric : Jersey knit Cotton/Polyamide - 5.50
70%cotton / 30%polyamide

COLORS	PANTONE SERIGRAPHIE
Black	Black
White	White

WEIGHT :

Main fabric : 5.5LBS - 210gsm

FABRIC CONSTRUCTION AND FINISHING :

Gauge 12 gg

DESCRIPTION	
Français :	Pull femme col V
English :	Ladies V-neck jumper
Nederlands :	Damespull met V hals
Deutsch :	V-neck pullover für damen
Español :	Jersey con escote de pico para mujer
Italiano :	Maglia donna scollo a V
Português :	Camisola decote V

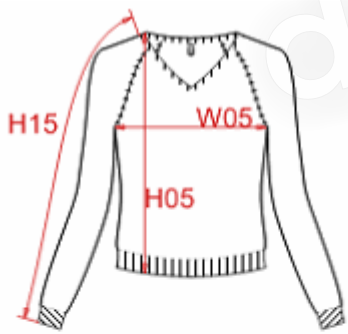

MEASUREMENT							
Description	**S**	**M**	**L**	**XL**	**XXL**		
W05 1/2 largeur poitrine/1/2 chest width	**38**	**40**	**42**	**45**	**48**		
H05 Hauteur totale / Total height	**55,50**	**57**	**58,50**	**60,50**	**62,50**		
H15 Longueur manche / Sleeve length	**69,50**	**71**	**72,50**	**74**	**75,50**		

PACKING	
Box	10 pcs / box S => L:49cm W:32cm H:14cm GW:2.90kg NW:1.90kg M => L:49cm W:32cm H:14cm GW:3.00kg NW:2.00kg L => L:49cm W:32cm H:14cm GW:3.20kg NW:2.20kg XL => L:49cm W:32cm H:14cm GW:3.40kg NW:2.40kg XXL => L:49cm W:32cm H:14cm GW:3.60kg NW:2.60kg

CARE LABEL

deetex.de

KARIBAN

REFERENCE : K948

NAME : EMMA

SIZES : S_M_L_XL_XXL

COMPOSITION :
Main fabric : Jersey knit Cotton/Polyamide - 5.50
70%cotton / 30%polyamide

COLORS	PANTONE SERIGRAPHIE
Black	Black
Heather grey	421C
White	White

WEIGHT :
Main fabric : 5.5LBS - 210gsm

FABRIC CONSTRUCTION AND FINISHING :
Size 2XL only for Black & White colors / Gauge 12gg

DESCRIPTION

Français :	Cardigan femme col V boutonné
English :	Ladies V-neck cardigan
Nederlands :	Geknoopte dames cardigan met V hals
Deutsch :	Damen cardigan
Español :	Cardigan abotonado con escote de pico para mujer
Italiano :	Cardigan donna scollo a V
Português :	Casaco decote V

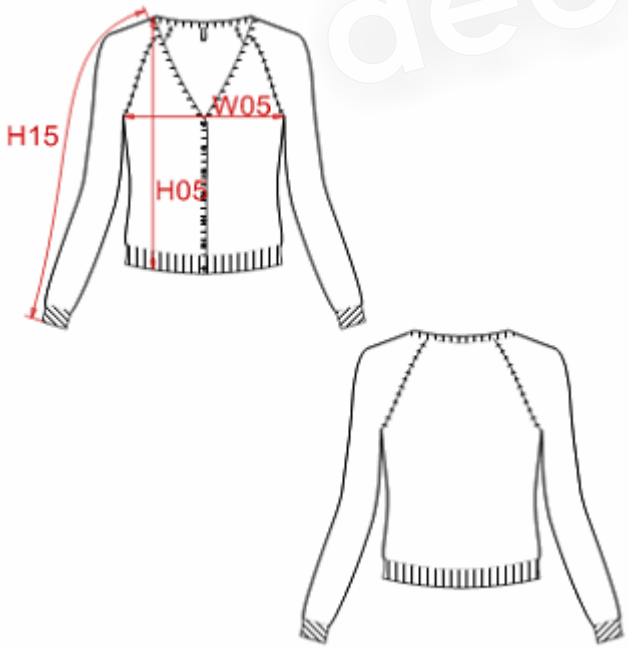

MEASUREMENT

Description	S	M	L	XL	XXL		
W05 1/2 largeur poitrine / 1/2 chest width	38	40	42	45	48		
H05 Hauteur totale / Total height	55,50	57	58,50	60,50	62,50		
H15 Longueur manche / Sleeve length	69,50	71	72,50	74	75,50		

PACKING

Box	10 pcs / box S => L:49cm W:32cm H:14cm GW:3.10kg NW:1.80kg M => L:49cm W:32cm H:14cm GW:3.30kg NW:2.00kg L => L:49cm W:32cm H:14cm GW:3.50kg NW:2.20kg XL => L:49cm W:32cm H:14cm GW:3.70kg NW:2.40kg XXL => L:49cm W:32cm H:14cm GW:3.90kg NW:2.60kg

CARE LABEL

deetex.de

KARIBAN

REFERENCE : K950

NAME : UMBERTO

SIZES : M_L_XL_XXL

COMPOSITION :
Main fabric : Jersey knit 20 100%cotton

COLORS	PANTONE SERIGRAPHIE
Chocolate	440C
Corde	7535C

WEIGHT :
Main fabric : 20LBS-605gsm

FABRIC CONSTRUCTION AND FINISHING :
Gauge 5gg

DESCRIPTION	
Français :	Pull homme col V
English :	V-neck jumper
Nederlands :	Herentrui met V hals
Deutsch :	V-Neck Pullover für Herren
Español :	Jersey con escote de pico
Italiano :	Maglia uomo scollo a V
Português :	Pullover decote V

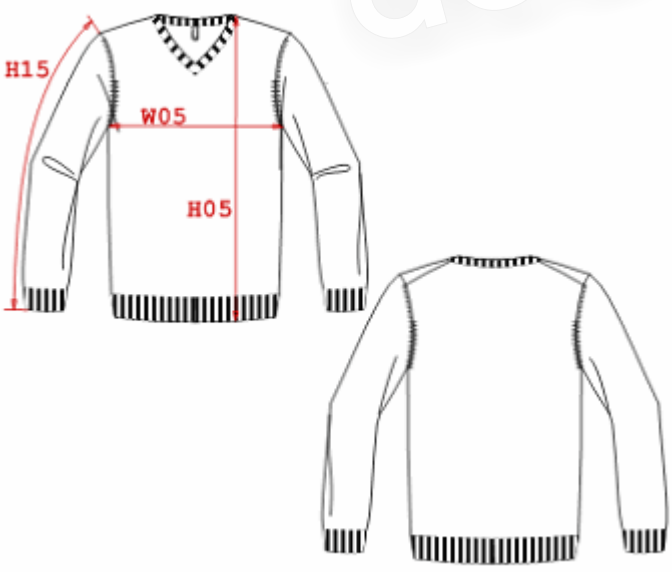

MEASUREMENT

Description	M	L	XL	XXL			
W05 1/2 largeur poitrine/1/2 chest width	53	56	59	63			
H05 hauteur totale/total height	70,50	72,50	74,50	77,25			
H15 longueur manche / Sleeve length	64	66	68	70,50			

PACKING

Box	10 pcs / box M => L:58cm W:37cm H:22cm GW:9.00kg NW:7.50kg L => L:60cm W:37cm H:22cm GW:9.00kg NW:7.50kg XL => L:60cm W:37cm H:22cm GW:9.00kg NW:7.50kg XXL => L:63cm W:37cm H:23cm GW:9.00kg NW:7.50kg

CARE LABEL

deetex.de

KARIBAN

REFERENCE : K951

NAME : GILBERTO

SIZES : S_M_L_XL_XXL_3XL

COMPOSITION :
Main fabric : Jersey knit Cotton/Polyamide - 7.50
70%cotton / 30%polyamide

COLORS	PANTONE SERIGRAPHIE
Black	Black
White	White

WEIGHT :
Main fabric : 7.50LBS-240gsm

FABRIC CONSTRUCTION AND FINISHING :
Gauge 12gg Double rib for neckline

DESCRIPTION	
Français :	Pull homme encolure V
English :	V-neck sweater
Nederlands :	Herenpull met V hals
Deutsch :	Herren pullover mit V-ausschnitt
Español :	Jersey escote de pico
Italiano :	Maglia uomo scollo a V
Português :	Pullover decote V

deetex.de

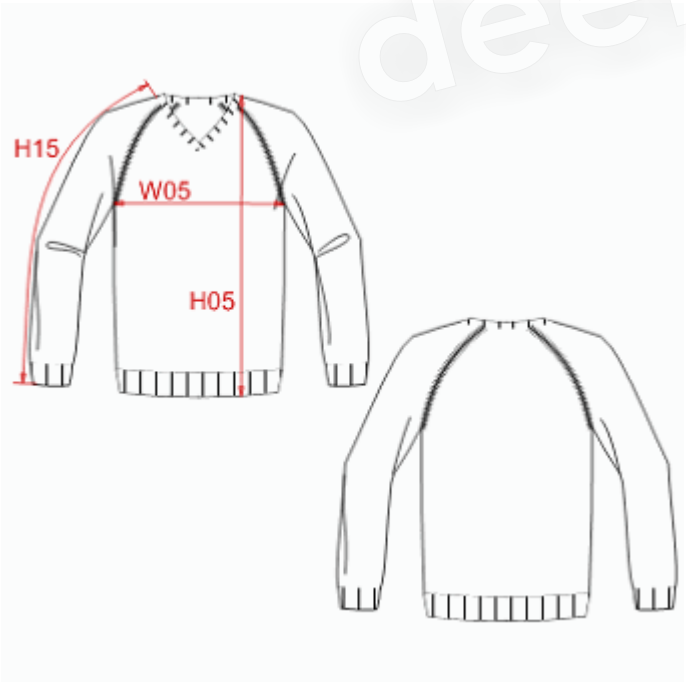

MEASUREMENT

Description	S	M	L	XL	XXL	3XL	
W05 1/2 largeur poitrine / 1/2 chest width	49	52	55	58	62	66	
H05 Hauteur totale / Total height	66	68	70	72	74,50	77	
H15 Longueur manche / Sleeve length	74	76,50	79	81,50	84,50	87,50	

PACKING

Box	10 pcs / box S => L:60cm W:37cm H:14cm GW:3.50kg NW:2.20kg M => L:60cm W:37cm H:14cm GW:3.70kg NW:2.40kg L => L:60cm W:37cm H:14cm GW:3.90kg NW:2.60kg XL => L:60cm W:37cm H:14cm GW:4.10kg NW:2.80kg XXL => L:60cm W:37cm H:14cm GW:4.20kg NW:2.90kg 3XL => L:60cm W:37cm H:14cm GW:4.30kg NW:3.00kg

CARE LABEL

KARIBAN

REFERENCE : K953

NAME : RENO

SIZES : M_L_XL_XXL

COMPOSITION :
Main fabric : Jersey knit 9.50 100% compact cotton

COLORS	PANTONE SERIGRAPHIE
Black	Black
Navy	296C

WEIGHT :
Main fabric : 9.50LBS-295gsm

FABRIC CONSTRUCTION AND FINISHING :
Gauge : 12gg

DESCRIPTION

Français :	Pull homme encolure ronde
English :	Round neck sweater
Nederlands :	Herenpull met ronde hals
Deutsch :	Herren rundhals-pullover
Español :	Jersey con cuello redondo
Italiano :	Maglia uomo scollo rotondo
Português :	Camisola de malha decote redondo

deetex.de

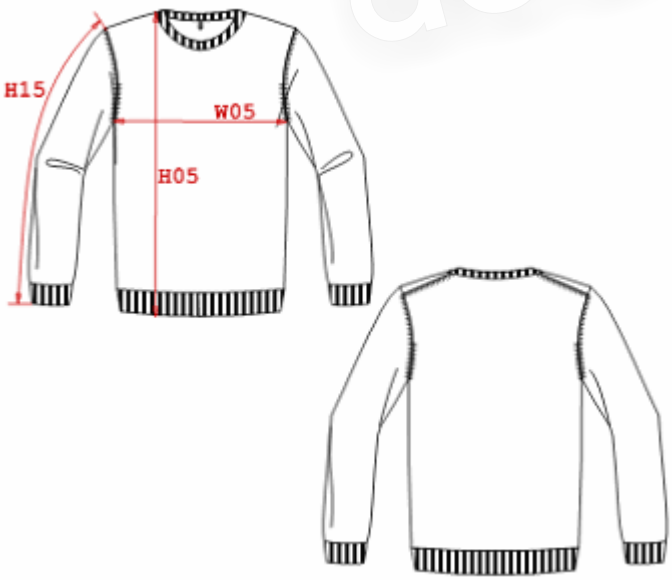

MEASUREMENT

Description	M	L	XL	XXL			
W05 1/2 largeur poitrine/1/2 chest width	52	55	58	62			
H05 hauteur totale/total height	66,50	68,50	70,50	73			
H15 longueur manche / Sleeve length	65	67	69	71,25			

PACKING

Box	10 pcs / box M => L:60cm W:37cm H:13cm GW:5.00kg NW:3.60kg L => L:60cm W:37cm H:13cm GW:5.20kg NW:3.80kg XL => L:60cm W:37cm H:13cm GW:5.40kg NW:4.00kg XXL => L:60cm W:37cm H:13cm GW:5.70kg NW:4.30kg

CARE LABEL

KARIBAN

REFERENCE : K955

NAME : MELISSA

SIZES : S_M_L_XL_XXL

COLORS	PANTONE SERIGRAPHIE
Black	Black
Chocolate	4975C

COMPOSITION :

Main fabric : Jersey knit 5.5 Body and sleeves: 7GG
Bottom: 12GG 70%cotton / 30%polyamide

WEIGHT :

Main fabric : 210 gsm-5.5 LBS

FABRIC CONSTRUCTION AND FINISHING :

12GG

DESCRIPTION

Français :	Tunique femme manches courtes encolure ronde
English :	Ladies short sleeve knit tunic
Nederlands :	Dames tuniek met ronde hals en korte mouwen
Deutsch :	Damen-Tunika mit Rundhals
Español :	Tunica de manga corta y escote redondo para mujer
Italiano :	Tunica donna maniche corte scollo otondo
Português :	Túnica de manga curta e decote redondo

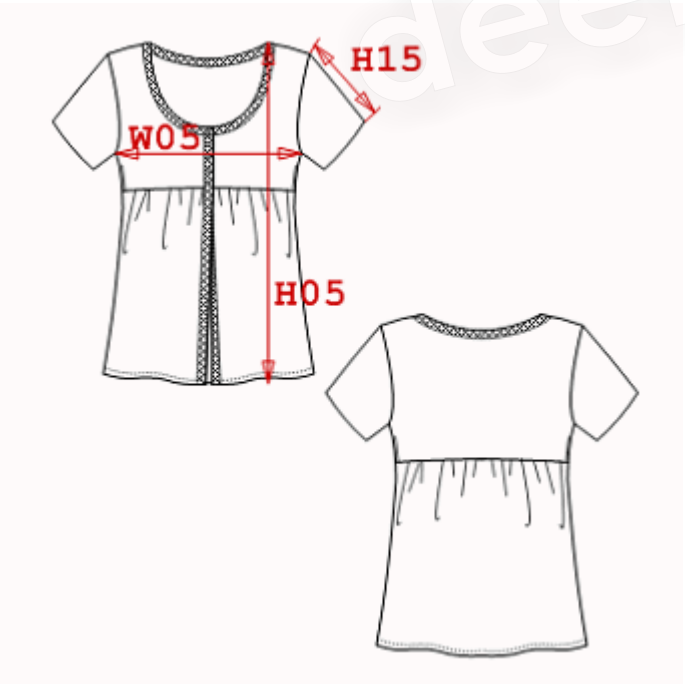

MEASUREMENT

Description	S	M	L	XL	XXL		
H05 Hauteur totale / Total height rib included	69	70,50	72	74	76		
W05 1/2 largeur poitrine / 1/2 chest width	38	40	42	45	48		
H15 Longueur manche / Sleeve length rib included	15	16	17	18	19		

PACKING

Box	10 pcs / box S => L:50cm W:38cm H:13cm GW:3.50kg NW:2.20kg M => L:50cm W:38cm H:13cm GW:3.60kg NW:2.30kg L => L:50cm W:38cm H:13cm GW:3.75kg NW:2.45kg XL => L:50cm W:38cm H:13cm GW:3.90kg NW:2.60kg XXL => L:50cm W:38cm H:13cm GW:4.00kg NW:2.70kg

CARE LABEL

deetex.de

KARIBAN

REFERENCE : K956

NAME : LARA

SIZES : S_M_L_XL_XXL

COLORS	PANTONE SERIGRAPHIE
Black	Black

COMPOSITION :
Main fabric : Jersey knit 5.5 70%cotton / 30%polyamide

WEIGHT :
Main fabric : 210 gsm-5.5 LBS

FABRIC CONSTRUCTION AND FINISHING :
Gauge 12gg

DESCRIPTION	
Français :	Pull femme col roulé
English :	Ladies rolled neck jumper
Nederlands :	Dames pull met rolkraag
Deutsch :	Rollkragenpullover für Damen
Español :	Jersey de cuello vuelto para mujer
Italiano :	Pullover donna collo alto
Português :	Camisola de senhora

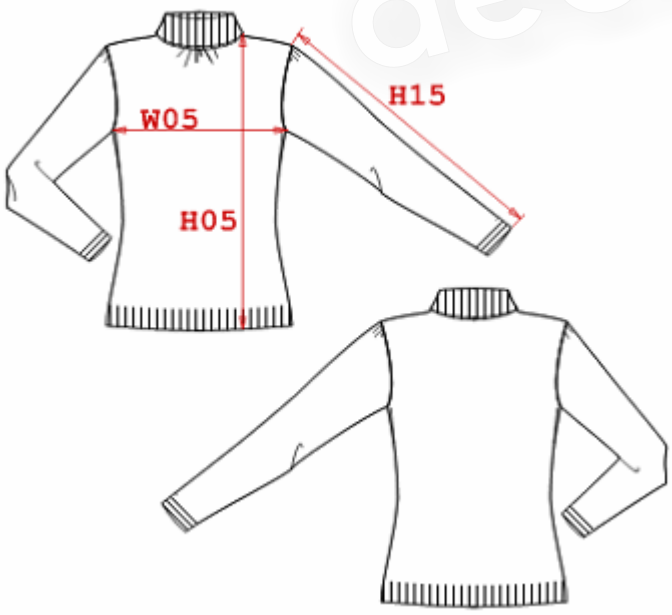

MEASUREMENT							
Description	**S**	**M**	**L**	**XL**	**XXL**		
W05 1/2 largeur poitrine/1/2 chest width	**40**	**42**	**44**	**47**	**50**		
H05 Hauteur totale / Total height	**62,50**	**64**	**65,50**	**67,50**	**69,50**		
H15 Longueur manche / Sleeve length	**60**	**61**	**62**	**63**	**64**		

PACKING	
Box	10 pcs / box S => L:55cm W:32cm H:13cm GW:3.50kg NW:2.40kg M => L:55cm W:32cm H:13cm GW:3.60kg NW:2.50kg L => L:55cm W:32cm H:13cm GW:3.75kg NW:2.55kg XL => L:55cm W:32cm H:13cm GW:3.90kg NW:2.60kg XXL => L:55cm W:32cm H:13cm GW:4.00kg NW:2.70kg

CARE LABEL

deetex.de

KARIBAN

REFERENCE : K957

NAME : LEO

SIZES : S_M_L_XL_XXL_3XL

COMPOSITION :
Main fabric : Jersey knit 5.5 70%cotton / 30%polyamide

COLORS	PANTONE SERIGRAPHIE
Black	Black

WEIGHT :
Main fabric : 210 gsm-5.5 LBS

DESCRIPTION	
Français :	Pull homme col roulé
English :	Rolled neck jumper
Nederlands :	Heren pull met rolkraag
Deutsch :	Rollkragen für Herren
Español :	Jersey de cuello vuelto
Italiano :	Pullover uomo collo alto
Português :	Camisola de homem

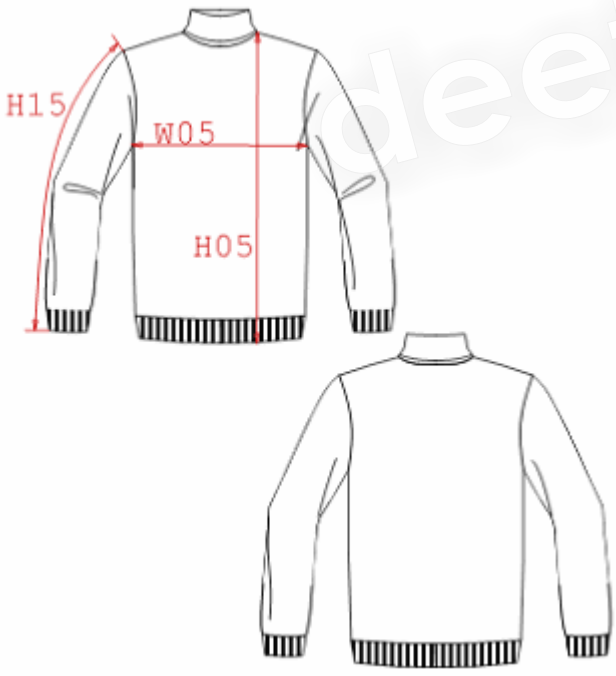

MEASUREMENT							
Description	**S**	**M**	**L**	**XL**	**XXL**	**3XL**	
W05 1/2 largeur poitrine/1/2 chest width	48	51	54	57	61	65	
H05 hauteur totale/total height	67	69	71	73	75,50	78	
H15 longueur manche / Sleeve length	62	64	66	68	70,50	73	

PACKING	
Box	10 pcs / box S => L:62cm W:39cm H:13cm GW:4.20kg NW:2.90kg M => L:62cm W:39cm H:13cm GW:4.40kg NW:3.10kg L => L:62cm W:39cm H:13cm GW:4.50kg NW:3.20kg XL => L:62cm W:39cm H:13cm GW:4.70kg NW:3.40kg XXL => L:62cm W:39cm H:13cm GW:5.00kg NW:3.70kg 3XL => L:62cm W:39cm H:13cm GW:5.20kg NW:3.90kg

CARE LABEL

deeteX.de

KARIBAN BIO

REFERENCE : KB120

NAME :

SIZES : U

COMPOSITION :
Main fabric : Organic terry 450 100% organic cotton

COLORS	PANTONE SERIGRAPHIE
Natural	1C

WEIGHT :
Main fabric : 450 gsm

DESCRIPTION	
Français :	Serviette de golf "Bio"
English :	"Bio" golf towel
Nederlands :	"Bio" golfhandoekje
Deutsch :	"Bio" golf tuch
Español :	Toalla de golf "Bio"
Italiano :	Asciugamano da golf "Bio"
Português :	Toalha de golfe "Bio"

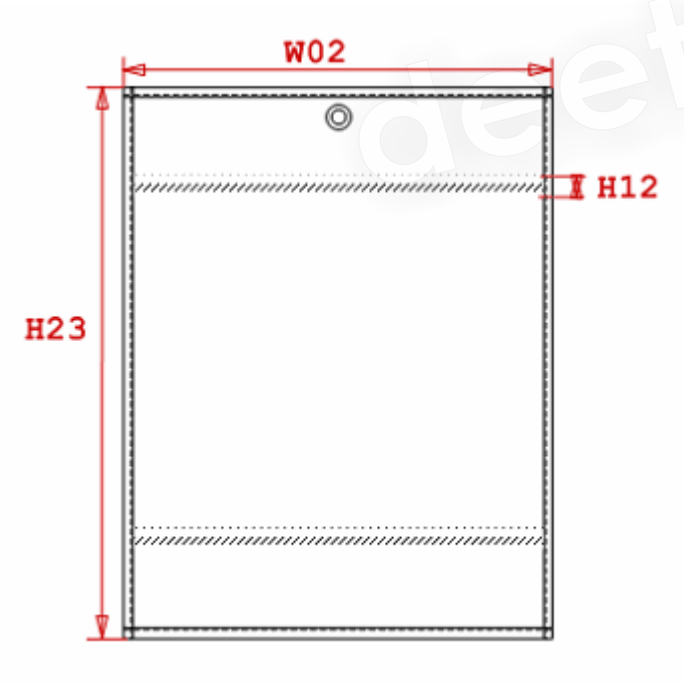

MEASUREMENT							
Description	**U**						
H23 Longueur serviette / Towel length	50						
W02 Largeur serviette / Towel width	30						
H12 Hauteur liteau / Border height	3,50						

PACKING	
Box	150 pcs / box

CARE LABEL

deetex.de

KARIBAN SARL au capital de 100 000 € 13 Avenue du Girou ZAC Eurocentre 31620 Villeneuve Les Bouloc Tél : 00 33 (0)5 61 00 62 00 Fax: 00 33 (0)5 53 84 68 43

KARIBAN BIO

REFERENCE : KB121

NAME :

SIZES : U

COLORS	PANTONE SERIGRAPHIE
Natural	1C

COMPOSITION :

Main fabric : Organic terry 450 100% organic cotton

WEIGHT :

Main fabric : 450 gsm

DESCRIPTION	
Français :	Serviette de toilette "Bio"
English :	"Bio" hand towel
Nederlands :	"Bio" toilethanddoek
Deutsch :	"Bio" handtuch
Español :	Toalla de baño "Bio"
Italiano :	Asciugamano da bagno "Bio"
Português :	Toalha de mão "Bio"

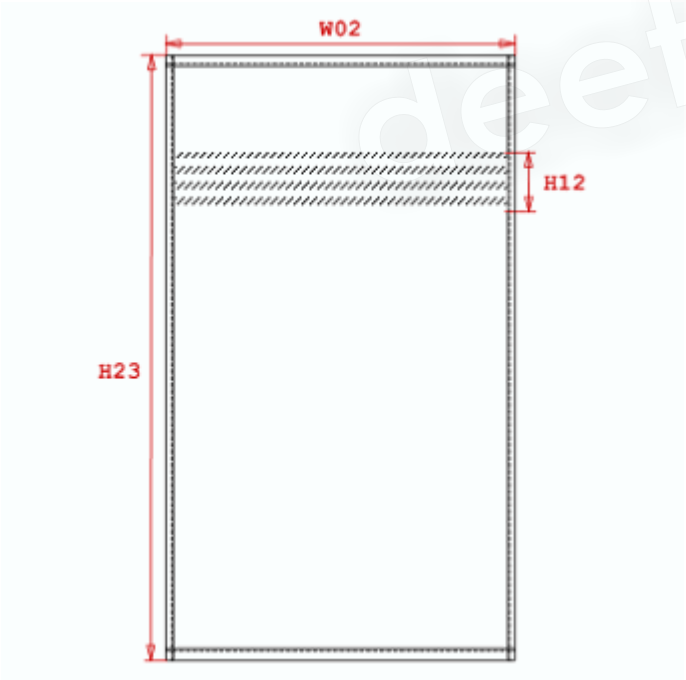

MEASUREMENT

Description	U						
H23 Longueur serviette / Towel length	100						
W02 Largeur serviette / Towel width	50						
H12 Hauteur liteau / Border height	8						

PACKING

Box	50 pcs / box

CARE LABEL

deetex.de

KARIBAN BIO

REFERENCE : KB122

NAME :

SIZES : U

COLORS	PANTONE SERIGRAPHIE
Natural	1C

COMPOSITION :

Main fabric : Organic terry 450 100% organic cotton

WEIGHT :

Main fabric : 450 gsm

DESCRIPTION	
Français :	Drap de bain "Bio"
English :	"Bio" bath towel
Nederlands :	"Bio" badhanddoek
Deutsch :	"Bio" badetuch
Español :	Toalla de baño "Bio"
Italiano :	Asciugamano da bagno "Bio"
Português :	Toahla de banho "Bio"

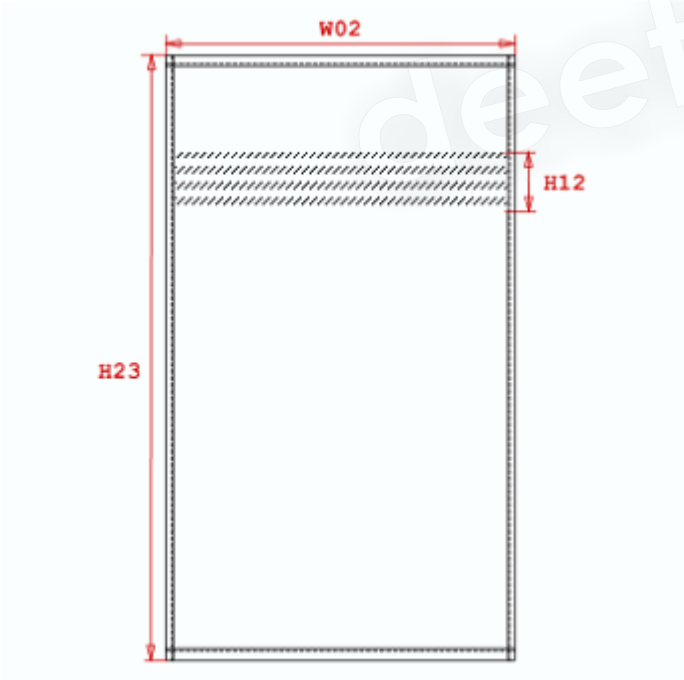

MEASUREMENT

Description	U						
H23 Longueur serviette / Towel length	140						
W02 Largeur serviette / Towel width	70						
H12 Hauteur liteau / Border height	8						

PACKING

Box	20 pcs / box

CARE LABEL

deetex.de

KARIBAN BIO

REFERENCE : KB123

NAME :

SIZES : U

COLORS	PANTONE SERIGRAPHIE
Natural	1C

COMPOSITION :

Main fabric : Organic terry 450 100% organic cotton

WEIGHT :

Main fabric : 450 gsm

DESCRIPTION	
Français :	Drap de plage "Bio"
English :	"Bio" beach towel
Nederlands :	"Bio" strandlaken
Deutsch :	"Bio" badelaken
Español :	Toalla de playa "Bio"
Italiano :	Asciugamano da spiaggia "Bio"
Português :	Toalha de praia "Bio"

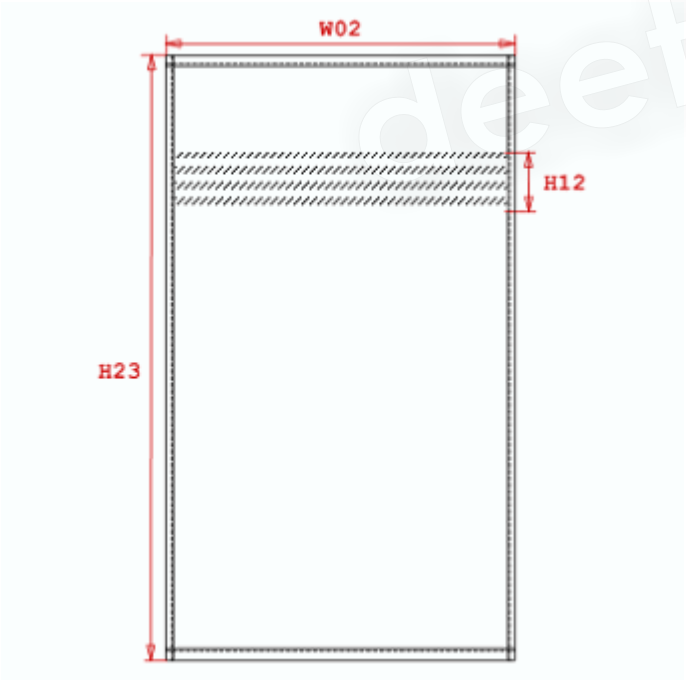

MEASUREMENT

Description	U						
H23 Longueur serviette / Towel length	150						
W02 Largeur serviette / Towel width	100						
H12 Hauteur liteau / Border height	8						

PACKING

Box	20 pcs / box

CARE LABEL

deeter.de

KARIBAN BIO

REFERENCE : KB200

NAME :

SIZES : U

COLORS	PANTONE SERIGRAPHIE
Natural	1C

COMPOSITION :

Main fabric : Brushed organic cotton twill 260 74x44 100% organic cotton

WEIGHT :

Main fabric : 260 gsm

FABRIC CONSTRUCTION AND FINISHING :

74x44 Washed

DESCRIPTION

Français :	Casquette bio
English :	"Bio" cap
Nederlands :	"Bio" pet
Deutsch :	Bio Kappe
Español :	Gorra bio
Italiano :	Cappellino bio
Português :	Boné "Bio" de 6 painéis

deetex.de

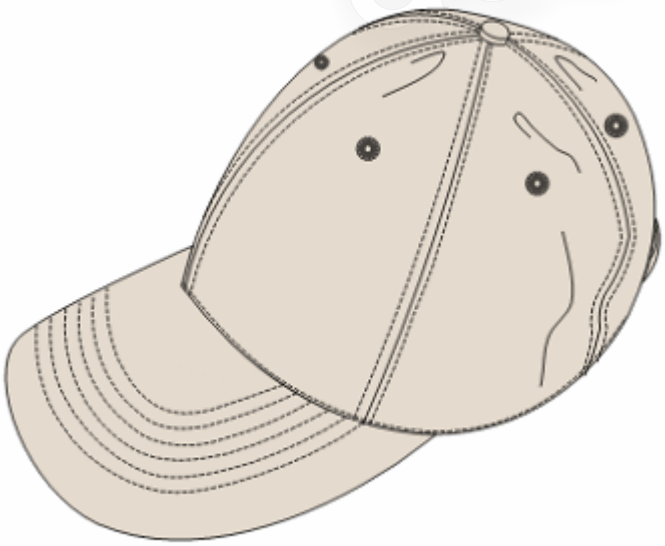

MEASUREMENT

Description	U						
H10 Tour de tête / Head measurement	58						

PACKING

Box	100 pcs / box U => L:51cm W:45cm H:36cm GW:9.50kg NW:7.50kg

CARE LABEL

KARIBAN BIO

REFERENCE : KB201

NAME :

SIZES : U

COLORS	PANTONE SERIGRAPHIE
Navy / Natural	539C / 7527C
White / Natural	White / 7527C
Natural / Navy	7527C / 539C

COMPOSITION :

Main fabric : Brushed organic cotton twill 260 74x44 100% organic cotton
Main fabric : Brushed organic cotton twill 260 For contrasted sandwich peak 100% organic cotton

WEIGHT :

Main fabric : 260 gsm
Main fabric : 260 gsm

FABRIC CONSTRUCTION AND FINISHING :

74x44 Washed

DESCRIPTION

Français :	Casquette bio 5 panneaux
English :	5 panel organic cap
Nederlands :	Bio pet met 5 segmenten
Deutsch :	5 - Teilig "Bio" kappe
Español :	Gorra 5 paneles bio
Italiano :	Cappellino bio 5 pannelli
Português :	Boné bio 5 painéis

deetex.de

MEASUREMENT

Description	U						
H10 Tour de tête / Head measurement	58						

PACKING

Box	100 pcs / box U => L:51cm W:45cm H:36cm GW:9.50kg NW:7.50kg

CARE LABEL

KARIBAN SAILING

REFERENCE : KM102

NAME :

SIZES : M_L_XL_XXL

COLORS	PANTONE SERIGRAPHIE
Ecume / Navy	Warm gray 1C / 296C
Navy / Ecume	296C / Warm gray 1C

COMPOSITION :

Main fabric : Cotton peached poplin 145 For body
100%cotton
Main fabric : Cotton peached poplin 145 For sleeve yokes
100%cotton

WEIGHT :

Main fabric : 145 gsm
Main fabric : 145 gsm

FABRIC CONSTRUCTION AND FINISHING :

120x100 / 40x40 Garment washed

DESCRIPTION

Français :	Chemise homme manches courtes bicolore
English :	Short sleeves bi-color men's shirt
Nederlands :	Tweekleurig herenhemd met korte mouwen
Deutsch :	Zweifarbiges Kurzarm Herren Hemd
Español :	Camisa de manga corta bicolor
Italiano :	Camicia uomo maniche corte bicolore
Português :	Camisa manga curta bicolor

deetex.de

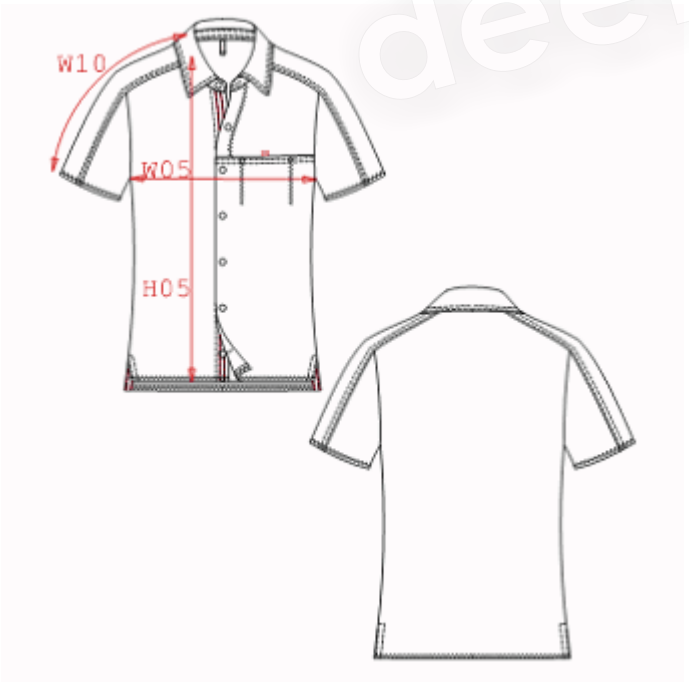

MEASUREMENT

Description	M	L	XL	XXL			
W05 1/2 largeur poitrine/1/2 chest width	55	58	61	65			
H05 Hauteur totale devant / Total front height	75	77	79	81,80			
W10 longueur épaule+manche / Shoulder+ sleeve length	38,85	40,50	42,20	44,60			

PACKING

Box	20 pcs / box M => L:38cm W:33cm H:23cm GW:5.80kg NW:4.80kg L => L:38cm W:33cm H:23cm GW:6.00kg NW:5.00kg XL => L:38cm W:33cm H:23cm GW:6.60kg NW:5.60kg XXL => L:38cm W:33cm H:23cm GW:6.90kg NW:5.90kg

CARE LABEL

KARIBAN SAILING

REFERENCE : KM203

NAME :

SIZES : M_L_XL_XXL

COLORS	PANTONE SERIGRAPHIE
Navy / White / Red	296C / White / 200C
White / Navy / Red	White / 296C / 200C

COMPOSITION :

Main fabric : Cotton Pique 205 100%cotton
Main fabric : Cotton Pique 205 For contrasted yokes 100%cotton
Fabric 2 : Cotton ribstop 200 For collar 100%cotton

WEIGHT :

Main fabric : 205 gsm
Main fabric : 205 gsm
Fabric 2 : 200 gsm

FABRIC CONSTRUCTION AND FINISHING :

1/30's -24gg Garment washed

DESCRIPTION

Français :	Polo manches courtes bicolore
English :	Short sleeves bi-color polo
Nederlands :	Tweekleurige polo met korte mouwen
Deutsch :	Zweifarbiges kurzarm polohemd
Español :	Polo de manga corta bicolor
Italiano :	Polo bicolore uomo maniche lunghe
Português :	Polo de manga curta bicolor

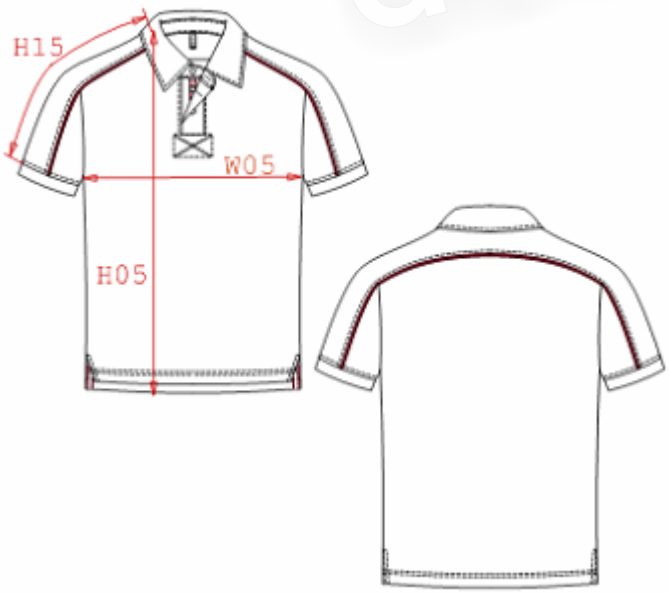

MEASUREMENT

Description	M	L	XL	XXL			
W05 1/2 largeur poitrine/1/2 chest width	55	58	61	65			
H05 Hauteur totale / Total height	75,30	77,30	79,30	81,80			
H15 longueur manche sans poignet/ Sleeve length without cuff	61,30	63,30	65,30	67,80			

PACKING

Box	25 pcs / box M => L:61cm W:42cm H:17cm GW:6.60kg NW:5.60kg L => L:61cm W:42cm H:17cm GW:7.00kg NW:6.00kg XL => L:61cm W:42cm H:17cm GW:7.40kg NW:6.40kg XXL => L:61cm W:42cm H:17cm GW:8.10kg NW:7.10kg

CARE LABEL

deetex.de

KARIBAN SAILING

REFERENCE : KM301

NAME :

SIZES : M_L_XL_XXL

COLORS	PANTONE SERIGRAPHIE
Navy	296C
Corde	7529C

COMPOSITION :

Main fabric : Jersey knit 17¼ 100%cotton
Fabric 2 : Gabardine 200 For back yoke and front placket 100%coton

WEIGHT :

Main fabric : 17¼LBS-490gsm
Fabric 2 : 200 gsm

FABRIC CONSTRUCTION AND FINISHING :

9gg 4ply 5x2 rib Garment dyed and stone washed

DESCRIPTION

Français :	Pull
English :	Polo collar jumper
Nederlands :	Pull
Deutsch :	Pullover
Español :	Pull
Italiano :	Maglia
Português :	Pullover sailing

deetex.de

MEASUREMENT

Description	M	L	XL	XXL			
W05 1/2 largeur poitrine/1/2 chest width	51	54	57	61			
H05 hauteur totale/total height	69	71	73	75,75			
H15 longueur manche / Sleeve length	78	80	82	84,50			

PACKING

Box	10 pcs / box M => L:56cm W:36cm H:20cm GW:8.00kg NW:7.00kg L => L:56cm W:36cm H:20cm GW:8.00kg NW:7.00kg XL => L:56cm W:36cm H:20cm GW:8.00kg NW:7.00kg XXL => L:56cm W:36cm H:20cm GW:8.00kg NW:7.00kg

CARE LABEL

KARIBAN SAILING

REFERENCE : KM304

NAME :

SIZES : M_L_XL_XXL

COLORS	PANTONE SERIGRAPHIE
Navy / Ecume	296C / Warm grey 1C

COMPOSITION :

Fabric 1 : Softshell 300 Woven fabric quality
For body 95%polyester / 5%elastane
Fabric 1 : Softshell 300 Woven fabric quality
For top sleeve and outer collar 95%polyester / 5%elastane

WEIGHT :

Fabric 1 : 300 gsm
Fabric 1 : 300 gsm

FABRIC CONSTRUCTION AND FINISHING :

3 layer bonded fabric (polyester outer layer,performance membrane, inner microfleece layer) BR: 3000gsm/24h / WP: 8000mm

DESCRIPTION

Français :	Veste homme zippée softshell
English :	Men's full zip softshell jacket
Nederlands :	Softshell herenvest met rits
Deutsch :	Herren Softshell Jacke
Español :	Chaqueta softshell con cremallera
Italiano :	Giacca uomo softshell
Português :	Blusão softshell

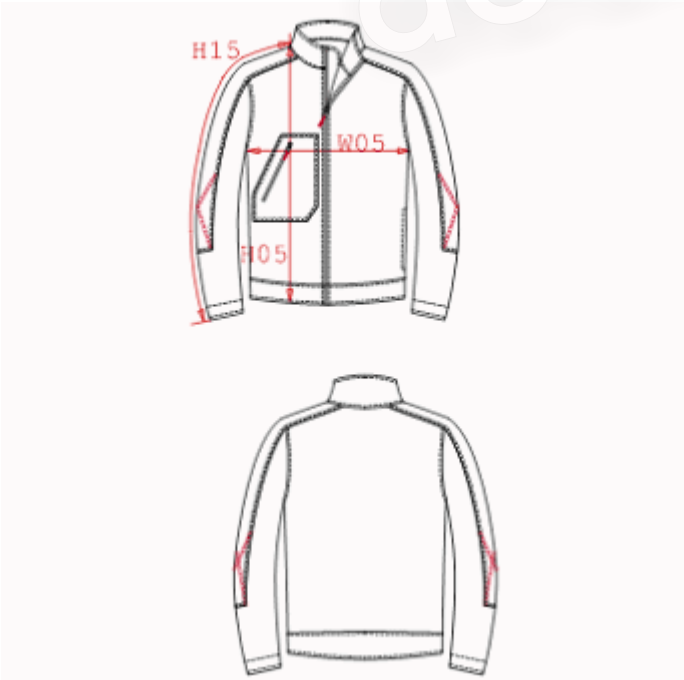

MEASUREMENT

Description	M	L	XL	XXL			
W05 1/2 largeur poitrine avec zip/1/2 chest width with zipper	56,35	59,35	62,35	66,10			
H05 hauteur totale avec bande bas/total height bottom yoke included	71,50	73,50	75,50	78,30			
H15 longueur manche / Sleeve length	81,05	83,80	86,50	90,05			

PACKING

Box	10 pcs / box M => L:60cm W:42cm H:27cm GW:6.50kg NW:5.50kg L => L:60cm W:42cm H:27cm GW:6.90kg NW:5.90kg XL => L:60cm W:42cm H:27cm GW:7.20kg NW:6.20kg XXL => L:60cm W:42cm H:27cm GW:7.40kg NW:6.40kg

CARE LABEL

deetex.de

KARIBAN SAILING

REFERENCE : KM305

NAME :

SIZES : S_M_L_XL

COLORS	PANTONE SERIGRAPHIE
Navy / Ecume	296C / Warm grey 1C

COMPOSITION :

Fabric 1 : Softshell 300 Woven fabric quality
For body 95%polyester / 5%elastane
Fabric 1 : Softshell 300 Woven fabric quality
For top sleeve and outer collar 95%polyester / 5%elastane

WEIGHT :

Fabric 1 : 300 gsm
Fabric 1 : 300 gsm

FABRIC CONSTRUCTION AND FINISHING :

3 layer bonded fabric (polyester outer layer, performance membrane and inner microfleece layer) BR: 3000gsm/24h / WP: 8000mm

DESCRIPTION

Français :	Veste femme zippée softshell
English :	Ladie's full zip softshell jacket
Nederlands :	Softshell damensvest met rits
Deutsch :	Damen Softshell Jacke
Español :	Chaqueta softshell con cremallera para mujer
Italiano :	Giacca donna softshell
Português :	Blusão de senhora softshell

MEASUREMENT

Description	S	M	L	XL			
W05 1/2 largeur poitrine avec zip/1/2 chest width with zipper	48	50	53	56			
H05 hauteur totale avec bande bas/total height bottom yoke included	64,05	65,55	67,80	70,10			
H15 longueur manche / Sleeve length	75,15	76,50	78,60	80,65			

PACKING

Box	10 pcs / box S => L:55cm W:37cm H:25cm GW:5.10kg NW:4.10kg M => L:55cm W:37cm H:25cm GW:5.30kg NW:4.30kg L => L:55cm W:37cm H:25cm GW:5.60kg NW:4.60kg XL => L:55cm W:37cm H:25cm GW:5.80kg NW:4.80kg

CARE LABEL

aeetex.de

KARIBAN SAILING

REFERENCE : KM401

NAME :

SIZES : 38_40_42_44_46_48_50

COMPOSITION :

Main fabric : Peached cotton twill 225 100%cotton

COLORS	PANTONE SERIGRAPHIE
Navy	296C
Ecume	Warm gray 1C
Vintage red	193C

WEIGHT :

Main fabric : 225 gsm

FABRIC CONSTRUCTION AND FINISHING :

129x72 / 20x20 Enzyme washed + softener

DESCRIPTION	
Français :	Short multipoches
English :	Multipockets short
Nederlands :	Short multi-zakjes
Deutsch :	Mehrere Taschen Short
Español :	Short multibolsillos
Italiano :	Short multitasche
Português :	Bermuda multibolsos

deetex.de

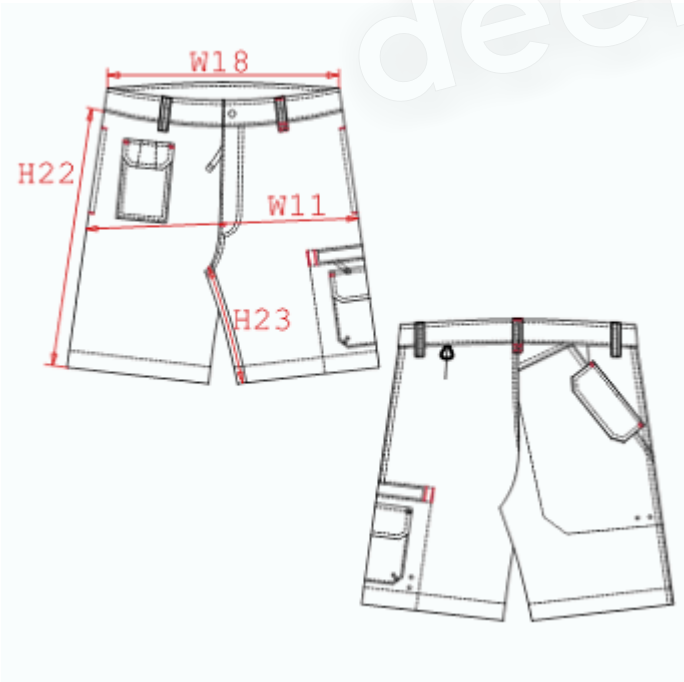

MEASUREMENT							
Description	**38**	**40**	**42**	**44**	**46**	**48**	**50**
W18 1/2 taille / 1/2 waist	**41**	**43**	**45**	**46,90**	**48,90**	**50,90**	**52,90**
W11 1/2 bassin / 1/2 hip width	**50,90**	**52,90**	**54,65**	**56,70**	**58,50**	**60,50**	**62,35**
H22 Longueur côté sans ceinture /Side length without waistband	**43,40**	**44,90**	**46,40**	**47,90**	**49,40**	**50,90**	**52,40**
H23 Longueur entrejambe / Inside leg length	**24,75**	**25,75**	**26,75**	**27,75**	**28,75**	**29,80**	**30,85**

PACKING	
Box	20 pcs / box 38 => L:61cm W:37cm H:21cm GW:10.60kg NW:8.80kg 40 => L:61cm W:37cm H:21cm GW:10.60kg NW:8.80kg 42 => L:61cm W:37cm H:21cm GW:10.60kg NW:8.80kg 44 => L:61cm W:37cm H:21cm GW:10.60kg NW:8.80kg 46 => L:61cm W:37cm H:21cm GW:10.60kg NW:8.80kg 48 => L:61cm W:37cm H:21cm GW:10.60kg NW:8.80kg 50 => L:61cm W:37cm H:21cm GW:10.60kg NW:8.80kg

KARIBAN SAILING

CARE LABEL

deetex.de

KARIBAN OUTDOOR

REFERENCE : KO300

NAME :

SIZES : U

COLORS	PANTONE SERIGRAPHIE
Sand	7528C
Charcoal	5467C

COMPOSITION :

Main fabric : Nylon ribstop 105 100%nylon
Fabric 1 : Mesh 105 For head ventilation and detachable neck flap 100%polyester

WEIGHT :

Main fabric : 105 gsm
Fabric 1 : 105 gsm

DESCRIPTION	
Français :	Casquette outdoor
English :	Outdoor flap cap
Nederlands :	Outdoor pet
Deutsch :	Outdoor kappe
Español :	Gorra outdoor
Italiano :	Cappellino outdoor
Português :	Boné outdoor

MEASUREMENT							
Description	**U**						
H10 Tour de tête / Head measurement	**59**						

PACKING	
Box	100 pcs / box U => L:57cm W:45cm H:30cm GW:9.90kg NW:7.90kg

CARE LABEL

KARIBAN SARL au capital de 100 000 € 13 Avenue du Girou ZAC Eurocentre 31620 Villeneuve Les Bouloc Tél : 00 33 (0)5 61 00 62 00 Fax: 00 33 (0)5 53 84 68 43

KARIBAN OUTDOOR

REFERENCE : KO301

NAME :

SIZES : U

COLORS	PANTONE SERIGRAPHIE
Light grey	422C
Jungle	5605C

COMPOSITION :

Main fabric : Polyester UV protection 105 100%polyester
Main fabric : Polyester UV protection 105 For contrasted inside brim 100%polyester

WEIGHT :

Main fabric : 105 gsm
Main fabric : 105 gsm

FABRIC CONSTRUCTION AND FINISHING :

UPF 20+

DESCRIPTION	
Français :	Chapeau outdoor protection anti UV et respirant
English :	Outdoor performance cap
Nederlands :	Outdoor hoed anti UV en ademend
Deutsch :	Atmungsaktives Outdoor Hut mit UV Schutz (UPF 20)
Español :	Gorro Outdoor anti UV UPF20 y transpirable
Italiano :	Cappello outdoor protezione anti UVA UPF 20
Português :	Panamà outdoor protecção UV

deetex.de

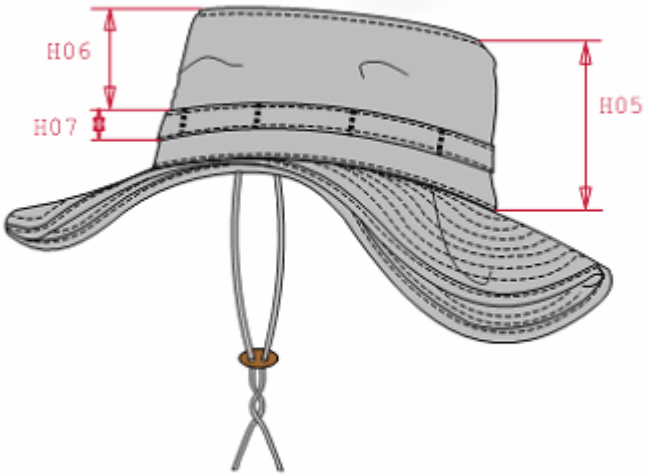

MEASUREMENT							
Description	**U**						
H10 Tour de tête / Head measurement	**59**						
H05 Hauteur totale chapeau / Cap total height	**9,50**						
H07 Hauteur bandeau / Band height	**1,50**						
H06 Hauteur chapeau sans la bande / Cap height without band	**6,50**						

PACKING	
Box	100 pcs / box U => L:64cm W:45cm H:34cm GW:9.00kg NW:6.70kg

CARE LABEL

KARIBAN OUTDOOR

REFERENCE : KO400

NAME :

SIZES : M_L_XL_XXL

COLORS	PANTONE SERIGRAPHIE
Sand	7528C
Charcoal	5467C

COMPOSITION :

Main fabric : 228T nylon taslon supplex 105 100%nylon
Main fabric : 228T nylon taslon supplex 105 For contrasted inner waistband 100%nylon
Mesh : Mesh 75 For inner pocket 100%polyester

WEIGHT :

Main fabric : 105 gsm
Main fabric : 105 gsm
Mesh : 75 gsm

FABRIC CONSTRUCTION AND FINISHING :

Supplex

DESCRIPTION

Français :	Pantacourt homme supplex respirant
English :	Breathable supplex 3/4 pants
Nederlands :	Herenkuitbroek içn ademend supplex
Deutsch :	Atmungsaktive supplex herren-caprihose
Español :	Pantalon pirata supplex transpirable
Italiano :	Pantaloni 3/4 uomo supplex
Português :	Corsário

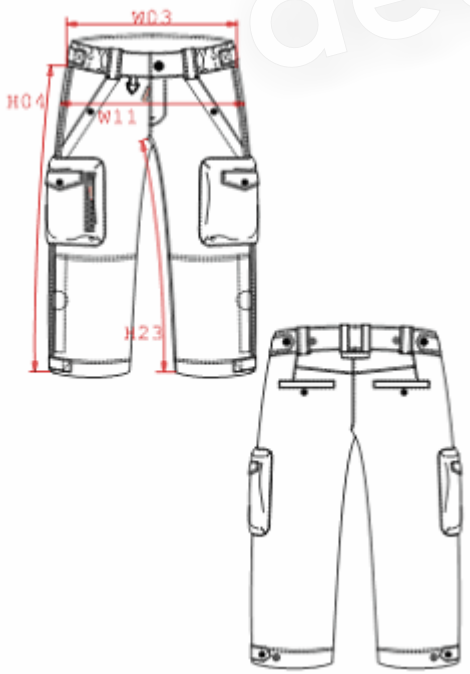

MEASUREMENT

Description	M	L	XL	XXL			
W03 1/2 largeur taille élastiquée / 1/2 elaticated waist width	39,20	42,20	45,20	49,20			
W11 1/2 bassin / 1/2 hip width	52,05	55,05	58,05	62,05			
H04 Hauteur coté / Side length	66,50	68,25	69,05	71,05			
H23 Longueur entrejambe / Inside leg length	45,30	46,30	46,35	47,35			

PACKING

Box	20 pcs / box M => L:62cm W:36cm H:14cm GW:5.50kg NW:4.00kg L => L:62cm W:36cm H:14cm GW:5.50kg NW:4.00kg XL => L:62cm W:36cm H:14cm GW:5.50kg NW:4.00kg XXL => L:62cm W:36cm H:14cm GW:5.50kg NW:4.00kg

CARE LABEL

deetex.de

KARIBAN OUTDOOR

REFERENCE : KO401

NAME :

SIZES : S_M_L_XL

COLORS	PANTONE SERIGRAPHIE
Sand	7528C
Charcoal	5467C

COMPOSITION :

Main fabric : 228T nylon taslon supplex 105 100%nylon
Main fabric : 228T nylon taslon supplex 105 For inner contrasted band 100%nylon
Mesh : Mesh 75 For inner pockets 100%polyester

WEIGHT :

Main fabric : 105 gsm
Main fabric : 105 gsm
Mesh : 75 gsm

FABRIC CONSTRUCTION AND FINISHING :

Supplex

DESCRIPTION

Français :	Pantacourt femme supplex respirant
English :	Ladies breathable supplex 3/4 pants
Nederlands :	Dameskuitbroek in ademend supplex
Deutsch :	Supplex atmungsaktive damen-caprihose
Español :	Pantalon pirata supplex transpirable para mujer
Italiano :	Pantaloni 3/4 donna supplex
Português :	

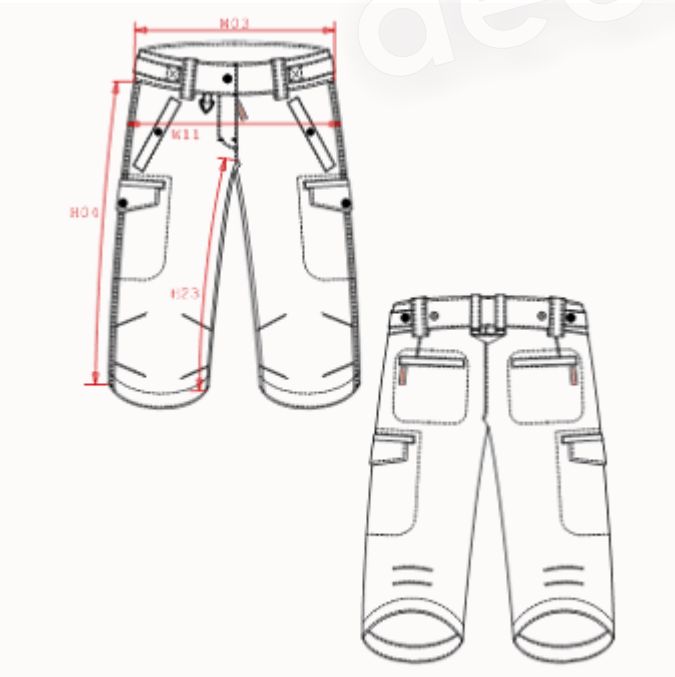

MEASUREMENT

Description	S	M	L	XL			
W03 1/2 largeur taille / 1/2 waist width	40,40	42,40	44,40	47,35			
W11 1/2 bassin / 1/2 hip width	47,35	49,35	51,35	54,35			
H04 Hauteur coté / Side length	63,35	64,85	65,35	67,15			
H23 Longueur entrejambe / Inside leg length	45,05	46,05	46,05	47,10			

PACKING

Box	20 pcs / box S => L:52cm W:30cm H:14cm GW:5.50kg NW:4.00kg M => L:52cm W:30cm H:14cm GW:5.50kg NW:4.00kg L => L:54cm W:32cm H:14cm GW:5.50kg NW:4.00kg XL => L:54cm W:32cm H:14cm GW:5.50kg NW:4.00kg

CARE LABEL

deetex.de

KARIBAN OUTDOOR

REFERENCE : KO402

NAME :

SIZES : M_L_XL_XXL

COLORS	PANTONE SERIGRAPHIE
Sand	7528C
Charcoal	5467C

COMPOSITION :

Main fabric : 228T nylon taslon supplex 105 100%nylon
Main fabric : 228T nylon taslon supplex 105 For inner waistband 100%nylon
Mesh : Mesh 75 For bottom gore and pocket sack 100%polyester

WEIGHT :

Main fabric : 105 gsm
Main fabric : 105 gsm
Mesh : 75 gsm

FABRIC CONSTRUCTION AND FINISHING :

Supplex

DESCRIPTION

Français :	Pantalon bermuda homme 2 en 1 supplex respirant
English :	Breathable supplex 2 in 1 zip-off pants
Nederlands :	Heren broek / bermuda homme 2 in 1 supplex ademend
Deutsch :	2 in 1 atmungsaktive supplex herren-hose
Español :	Pantalon bermuda 2 en 1 supplex transpirable
Italiano :	Bermuda uomo 2 in 1
Português :	Calça 2 em 1

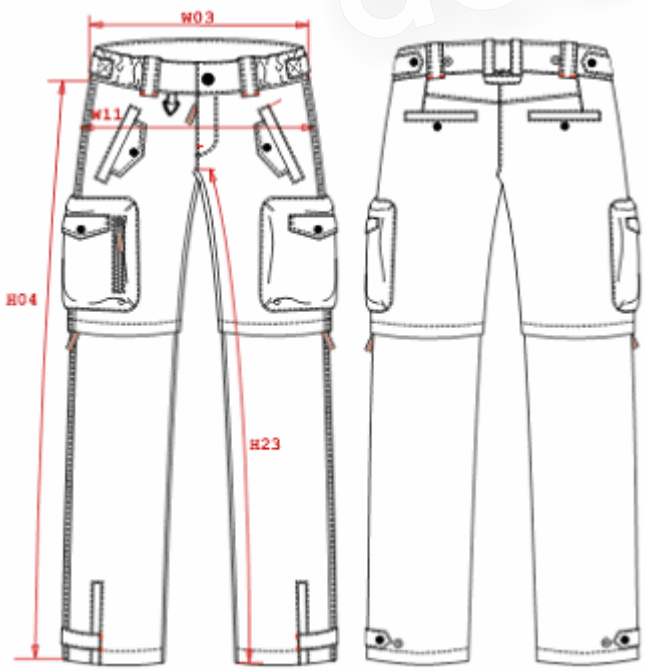

MEASUREMENT

Description	M	L	XL	XXL			
W03 1/2 largeur taille élastiquée / 1/2 waist width elasticated	40,20	43,20	46,20	50,20			
W11 1/2 bassin / 1/2 hip width	52,75	55,75	58,75	62,75			
H04 Hauteur coté / Side length	101,15	103,95	104,70	107,75			
H23 Longueur entrejambe / Inside leg length	79,85	81,90	81,90	83,95			

PACKING

Box	20 pcs / box M => L:72cm W:42cm H:14cm GW:7.50kg NW:6.00kg L => L:72cm W:42cm H:14cm GW:7.50kg NW:6.00kg XL => L:72cm W:42cm H:14cm GW:7.50kg NW:6.00kg XXL => L:72cm W:42cm H:14cm GW:7.50kg NW:6.00kg

CARE LABEL

deetex.de

KARIBAN OUTDOOR

REFERENCE : KO403

NAME :

SIZES : S_M_L_XL

COLORS	PANTONE SERIGRAPHIE
Sand	7528C
Charcoal	5467C

COMPOSITION :

Main fabric : 228T nylon taslon supplex 105 100%nylon
Main fabric : 228T nylon taslon supplex 105 For inner contrasted waistband 100%nylon
Mesh : Mesh 75 For pocket sack 100%polyester

WEIGHT :

Main fabric : 105 gsm
Main fabric : 105 gsm
Mesh : 75 gsm

FABRIC CONSTRUCTION AND FINISHING :

Supplex

DESCRIPTION

Français :	Pantalon bermuda femme 2 en 1 supplex respirant
English :	Ladies breathable supplex 2 in 1 zip-off pants
Nederlands :	Damesbermuda / brooke 2 in 1 supplex ademend
Deutsch :	2 in 1 damen-hose in atmungsaktives supplex gewebe
Español :	Pantalon bermuda 2 en 1 supplex transpirable para mujer
Italiano :	Pantalone bermuda donna 2 in 1
Português :	Calças 2 em 1 de senhora

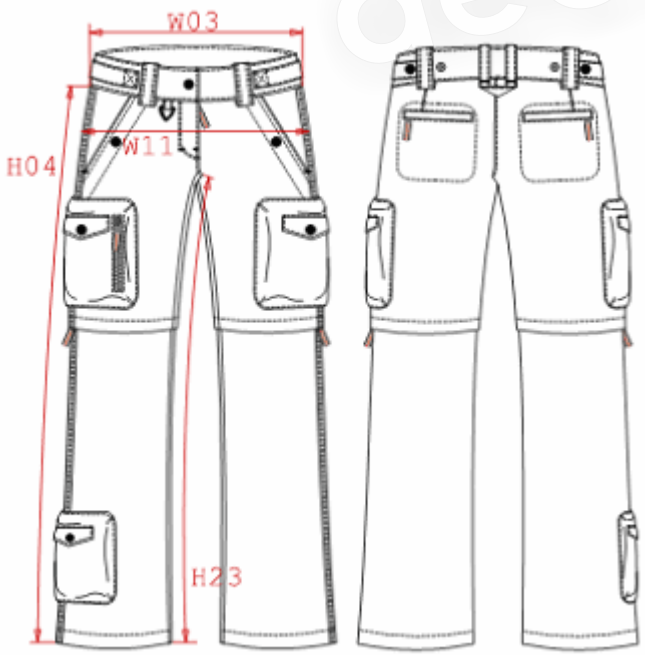

MEASUREMENT

Description	S	M	L	XL			
W03 1/2 largeur taille / 1/2 waist width	40,40	42,40	44,40	47,35			
W11 1/2 bassin / 1/2 hip width	47,35	49,35	51,35	54,35			
H04 Hauteur coté / Side length	99,50	100	101,50	102,30			
H23 Longueur entrejambe / Inside leg length	81,45	81,45	82,50	82,55			

PACKING

Box	20 pcs / box S => L:60cm W:36cm H:14cm GW:7.50kg NW:6.00kg M => L:60cm W:36cm H:14cm GW:7.50kg NW:6.00kg L => L:66cm W:37cm H:14cm GW:7.50kg NW:6.00kg XL => L:66cm W:37cm H:14cm GW:7.50kg NW:6.00kg

CARE LABEL

deetex.de

KARIBAN SPORT

REFERENCE : KS01

NAME :

SIZES : XS_S_M_L_XL_XXL_3XL

COMPOSITION :

Main fabric : Interlock Cool Plus 145 100%polyester 'Cool Plus'
Main fabric : Interlock Cool Plus 145 For side yokes 100%polyester 'Cool Plus'
Main fabric : Interlock Cool Plus 145 For front and back yokes 100%polyester 'Cool Plus'

COLORS	PANTONE SERIGRAPHIE
White / Grey / Lime	White / 7539C/ 381C
Orange / Grey / White	158C / 7539C / White
Sky blue / Grey / White	277C / 7539C / White
Navy / Grey	296C / 7539C
Black / Grey	Black / 7539C
Red / Grey	186C / 7539C

WEIGHT :

Main fabric : 145 gsm
Main fabric : 145 gsm
Main fabric : 145 gsm

DESCRIPTION

Français :	Tee-shirt respirant à séchage rapide
English :	Performance Tee-shirt
Nederlands :	Ademende Tee-shirt met snelle droging
Deutsch :	Schnell trocknendes atmungsaktives Tee-shirt
Español :	Camiseta para hombre - Tejido respirante facilitando la evacuacion ràpida de transpiracion
Italiano :	Tee-shirt a asciugatura rapida
Português :	T-shirt de desporto

CARE LABEL

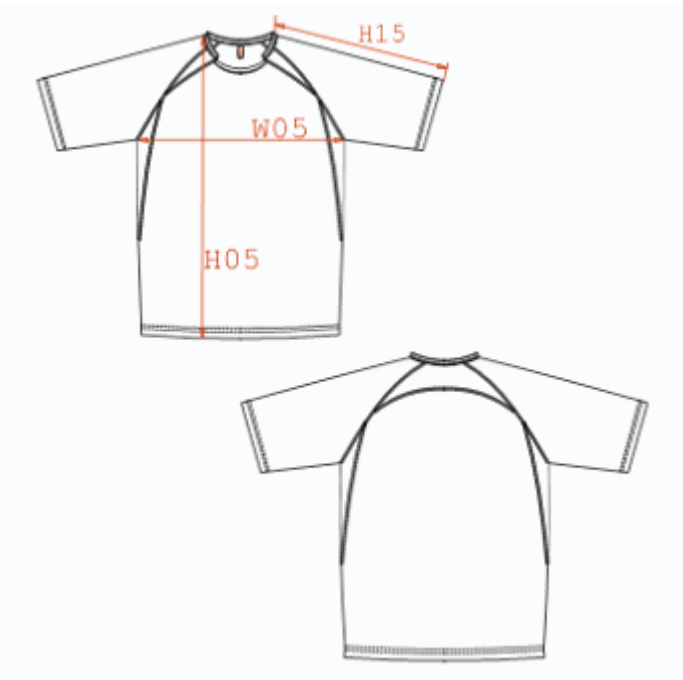

MEASUREMENT

Description	XS	S	M	L	XL	XXL	3XL
H05 Hauteur totale / Total height	66,60	68,70	70,80	72,90	75	77,95	80,85
W05 1/2 largeur poitrine / 1/2 chest width	45	48	51	54	57	61	65
H15 Longueur manche / Sleeve length	32,25	34,15	36,05	37,95	39,85	42,30	44,70

PACKING

Box	50 pcs / box XS => L:54cm W:39cm H:26cm GW:9.00kg NW:7.50kg S => L:54cm W:39cm H:26cm GW:9.20kg NW:7.60kg M => L:54cm W:39cm H:26cm GW:9.40kg NW:7.90kg L => L:54cm W:39cm H:26cm GW:9.60kg NW:8.00kg XL => L:60cm W:39cm H:27cm GW:11.00kg NW:9.00kg XXL => L:60cm W:39cm H:27cm GW:11.10kg NW:9.30kg 3XL => L:62cm W:39cm H:28cm GW:11.50kg NW:9.80kg

KARIBAN SPORT

REFERENCE : KS011

NAME :

SIZES : S_M_L_XL_XXL

COMPOSITION :

Main fabric : Jersey Cool Comfort 250 92%polyester/ 8%elastane

COLORS	PANTONE SERIGRAPHIE
Black / Grey	Black / Cool gray 7C
White / Grey	White / Cool gray 7C
Red / Grey	200C / Cool gray 7C
Orange / Grey	151C / Cool gray 7C
Turquoise / Grey	7486C / Cool gray 7C

WEIGHT :

Main fabric : 250 gsm

FABRIC CONSTRUCTION AND FINISHING :

Cool comfort, breathable

DESCRIPTION

Français :	T-Shirt prés du corps " Cool Comfort"
English :	Shaped short sleeves T-Shirt
Nederlands :	Nauwsluitende T-Shirt " Cool Comfort "
Deutsch :	Kôrperbetonte Kurzarm "Cool Comfort" T-Shirt
Español :	Camisetta entallada " Cool Comfort"
Italiano :	T-Shirt Cool Comfort
Português :	T-shirt de treino "Cool Comfort"

deetex.de

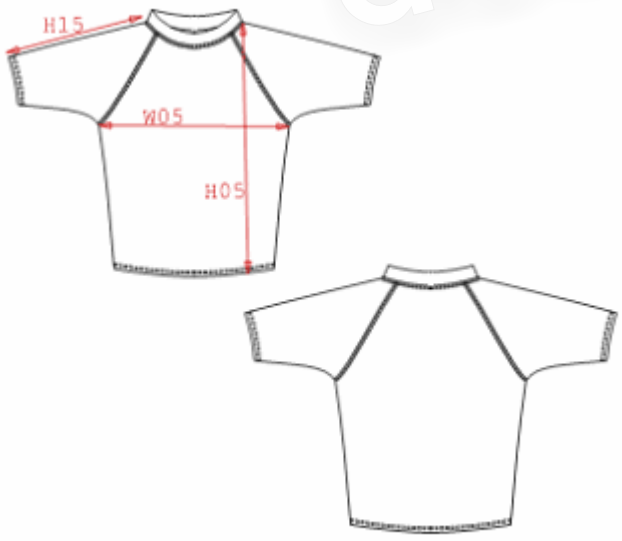

MEASUREMENT

Description	S	M	L	XL	XXL		
H05 Hauteur totale dvt/ Front total height	59,70	61,70	63,70	65,70	68,40		
W05 1/2 largeur poitrine/1/2 chest width	43,65	46,65	49,65	52,65	56,65		
H15 Longueur dessus de manche / Outtter sleeve length + shoulder	33,50	34,75	35,95	37,20	38,90		

PACKING

Box	25 pcs / box S-XXL => L:40cm W:32cm H:20cm GW:6.00kg NW:5.00kg

CARE LABEL

KARIBAN SPORT

REFERENCE : KS014

NAME :

SIZES : S_M_L_XL_XXL_3XL

COMPOSITION :

Main fabric : Interlock Cool Plus / Polyester - 145
50%polyester 'Cool Plus' / 50%polyester

WEIGHT :

Main fabric : 145 gsm

FABRIC CONSTRUCTION AND FINISHING :

Moisture control fabric

COLORS	PANTONE SERIGRAPHIE
White	White
Red	186C
Black	Black
Navy	2965C
Aqua blue	3005C
Lime	374C
Orange	1505C
Fine grey	Cool gray 7C
True Yellow	116C

DESCRIPTION

Français :	Polo respirant à séchage rapide
English :	Performance polo
Nederlands :	Ademende en sneldrogende polo
Deutsch :	Schnell Trockendes-Atmungsaktives Polohemd
Español :	Polo transpirable de secado rapido
Italiano :	Polo asciugatura rapida
Português :	Polo de homen de desporto

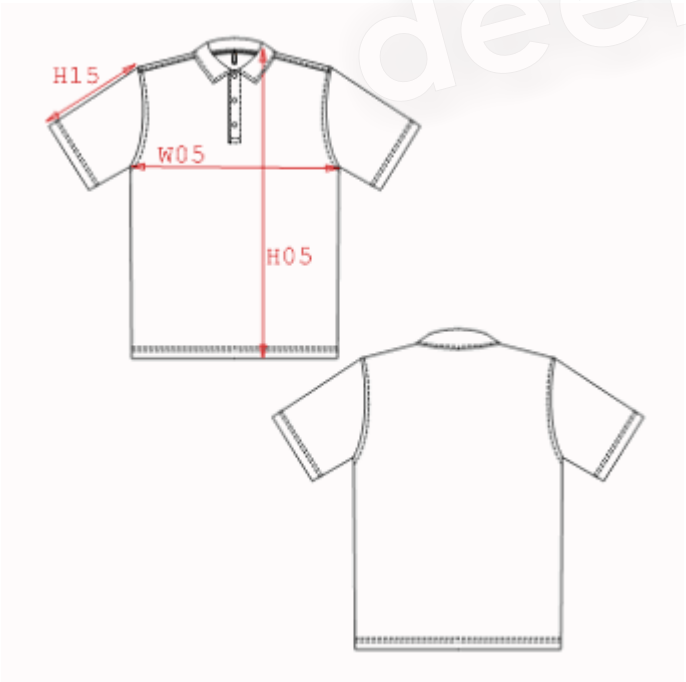

MEASUREMENT

Description	S	M	L	XL	XXL	3XL	
H05 Hauteur totale/total height	68,70	70,70	72,70	74,70	77,45	80,20	
W05 1/2 largeur poitrine/1/2 chest width	48,50	51,50	54,50	57,50	61,50	65,50	
H15 Longueur dessus de manche / sleeve length	21,35	22,35	23,35	24,35	25,85	27,35	

PACKING

Box	25 pcs / box S => L:56cm W:39cm H:16cm GW:5.30kg NW:3.80kg M => L:56cm W:39cm H:16cm GW:5.60kg NW:4.10kg L => L:56cm W:39cm H:16cm GW:5.70kg NW:4.20kg XL => L:62cm W:39cm H:18cm GW:6.20kg NW:4.50kg XXL => L:62cm W:39cm H:18cm GW:6.60kg NW:4.90kg 3XL => L:62cm W:39cm H:18cm GW:6.80kg NW:5.10kg

CARE LABEL

deetex.de

KARIBAN SPORT

REFERENCE : KS016

NAME :

SIZES : S_M_L_XL

COMPOSITION :

Main fabric : Interlock Cool Plus / Polyester - 145
50%polyester 'Cool Plus' / 50%polyester

WEIGHT :

Main fabric : 145 gsm

FABRIC CONSTRUCTION AND FINISHING :

Moisture control fabric

COLORS	PANTONE SERIGRAPHIE
White	White
Black	Black
Red	186C
Navy	2965C
Fine grey	Cool gray 7C
Orange	1505C
Lime	374C
Aqua blue	3005C
True Yellow	116C
Fuschia	218C

DESCRIPTION

Français :	Polo femme respirant à séchage rapide
English :	Ladies performance polo
Nederlands :	Ademende en sneldrogende damespolo
Deutsch :	Schnell-Trockendes-Atmungsaktives Polohemd für Damen
Español :	Polo transpirable de secado rapido para mujer
Italiano :	Polo donna asciugatura rapida
Português :	Polo de senhora de desporto

MEASUREMENT

Description	S	M	L	XL			
H05 Hauteur totale/total height	62,30	63,80	65,80	68,05			
W05 1/2 largeur poitrine/1/2 chest width	43,60	45,60	47,60	50,60			
H15 Longueur dessus de manche / Outtter sleeve length	11	11,80	12,50	14			

PACKING

Box	25pcs / box S => L:42cm W:35cm H:14cm GW:3.90kg NW:2.70kg M => L:42cm W:35cm H:14cm GW:4.10kg NW:2.90kg L => L:46cm W:35cm H:16cm GW:4.30kg NW:3.10kg XL => L:46cm W:35cm H:16cm GW:4.50kg NW:3.30kg

CARE LABEL

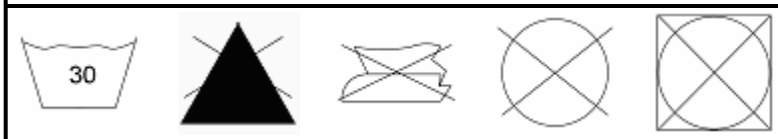

deetex.de

KARIBAN SPORT

REFERENCE : KS017

NAME :

SIZES : XS_S_M_L_XL_XXL_3XL

COMPOSITION :

Main fabric : Polyester birdeyes 140 100%polyester

WEIGHT :

Main fabric : 140 gsm

FABRIC CONSTRUCTION AND FINISHING :

Birdeyes

COLORS	PANTONE SERIGRAPHIE
White	White
Red	186C
Navy	2965C
Black	Black
Lime	374C
Orange	1505C
Aqua blue	3005C
Violet	2745C
Olive	449C
Sand	7529C
True Yellow	116C
Fine grey	Cool gray 7C
Sky blue	277C
Fluorescent yellow	809C

DESCRIPTION

Français :	Tee-shirt homme manches courtes
English :	Short sleeve sport T-shirt
Nederlands :	Heren tee-shirt met korte mouwen
Deutsch :	Kurzarm herren-shirt
Español :	Camiseta de manga corta
Italiano :	Tee-shirt uomo maniche corte
Português :	T-shirt manga curta de desporto

teetex.de

CARE LABEL

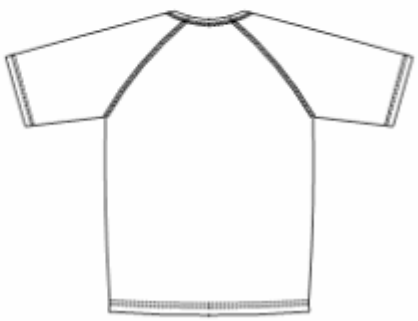

MEASUREMENT

Description	XS	S	M	L	XL	XXL	3XL
H05 Hauteur totale / Total height	68,20	70,30	72,40	74,50	76,60	79,50	82,40
W05 1/2 largeur poitrine / 1/2 chest width	45,50	48,50	51,50	54,50	57,50	61,50	65,50
H15 Longueur manche / Sleeve length	34,20	36,10	38	39,90	41,80	44,25	46,70

PACKING

Box	50 pcs / box XS => L:50cm W:39cm H:20cm GW:6.80kg NW:5.80kg S => L:52cm W:39cm H:20cm GW:7.30kg NW:6.30kg M => L:52cm W:39cm H:20cm GW:8.40kg NW:7.30kg L => L:56cm W:39cm H:20cm GW:9.00kg NW:7.80kg XL => L:56cm W:39cm H:20cm GW:9.60kg NW:8.40kg XXL => L:62cm W:39cm H:20cm GW:10.20kg NW:8.80kg 3XL => L:62cm W:39cm H:20cm GW:10.60kg NW:9.20kg

KARIBAN SPORT

REFERENCE : KS018

NAME :

SIZES : XS_S_M_L_XL_XXL

COMPOSITION :

Main fabric : Polyester birdeyes 140 100%polyester

WEIGHT :

Main fabric : 140 gsm

FABRIC CONSTRUCTION AND FINISHING :

Birdeyes

COLORS	PANTONE SERIGRAPHIE
White	White
Orange	1505C
Aqua blue	3005C
Lime	374C
Navy	2965C
Red	186C
Black	Black
Violet	2745C
True Yellow	116C
Fluorescent yellow	809C

DESCRIPTION

Français :	Débardeur
English :	Sport vest
Nederlands :	Débardeur
Deutsch :	Ärmelloses top
Español :	Camiseta sin mangas
Italiano :	Canottiera
Português :	T-shirt atletic de desporto

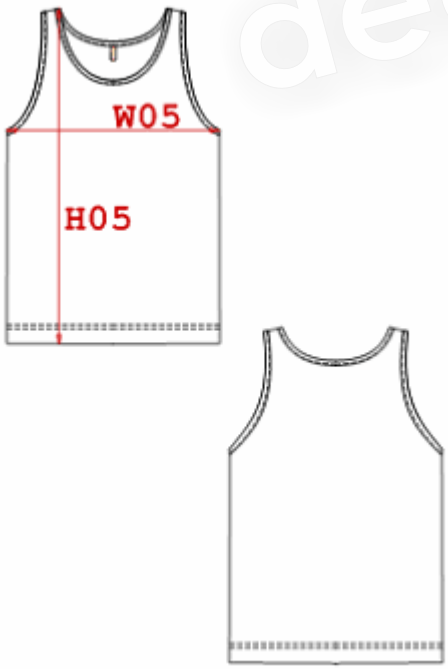

MEASUREMENT

Description	XS	S	M	L	XL	XXL	
H05 Hauteur totale / Total height	64,95	66,95	68,95	70,95	72,95	75,50	
W05 1/2 largeur poitrine / 1/2 chest width	43	46	49	52	55	59	

PACKING

Box	50 pcs / box XS => L:52cm W:39cm H:16cm GW:6.00kg NW:4.80kg S => L:52cm W:39cm H:16cm GW:6.20kg NW:5.00kg M => L:56cm W:39cm H:16cm GW:7.00kg NW:5.50kg L => L:56cm W:39cm H:16cm GW:7.20kg NW:5.70kg XL => L:60cm W:39cm H:16cm GW:7.80kg NW:6.20kg XXL => L:60cm W:39cm H:16cm GW:8.40kg NW:6.80kg

CARE LABEL

deetex.de

KARIBAN SPORT

REFERENCE : KS02

NAME :

SIZES : XS_S_M_L_XL_XXL_3XL

COMPOSITION :

Main fabric : Interlock Cool Plus 145 For body, neckline and armhole binding. 100%polyester 'Cool Plus'
Main fabric : Interlock Cool Plus 145 For side yokes 100%polyester 'Cool Plus'
Main fabric : Interlock Cool Plus 145 For front and back yokes 100%polyester 'Cool Plus'

WEIGHT :

Main fabric : 145 gsm
Main fabric : 145 gsm
Main fabric : 145 gsm

COLORS	PANTONE SERIGRAPHIE
White / Grey / Lime	White / 7539C/ 381C
Orange / Grey / White	158C / 7539C / White
Sky blue / Grey / White	277C / 7539C / White
Navy / Grey	296C / 7539C
Black / Grey	Black / 7539C
Red / Grey	186C / 7539C

DESCRIPTION

Français :	Débardeur respirant à séchage rapide
English :	Performance running vest
Nederlands :	Ademende débardeur met snelle droging
Deutsch :	Schnell trocknendes armelloses atmungsaktives top
Español :	Camiseta sin mangas
Italiano :	Canottiera a asciugatura rapida
Português :	T-shirt atletic de desporto

MEASUREMENT

Description	XS	S	M	L	XL	XXL	3XL
H05 Hauteur totale / Total height	66,40	68,40	70,40	72,40	74,40	77,15	79,90
W05 1/2 largeur poitrine / 1/2 chest width	45	48	51	54	57	61	65

PACKING

Box	50 pcs / box XS => L:54cm W:39cm H:26cm GW:7.70kg NW:6.10kg S => L:54cm W:39cm H:26cm GW:8.00kg NW:6.40kg M => L:54cm W:39cm H:26cm GW:9.00kg NW:7.30kg L => L:54cm W:39cm H:26cm GW:9.30kg NW:7.60kg XL => L:60cm W:39cm H:27cm GW:10.00kg NW:8.30kg XXL => L:60cm W:39cm H:27cm GW:10.20kg NW:8.50kg 3XL => L:62cm W:39cm H:27cm GW:10.30kg NW:8.60kg

CARE LABEL

deetex.de

KARIBAN SPORT

REFERENCE : KS021

NAME :

SIZES : M_L_XL_XXL

COLORS	PANTONE SERIGRAPHIE
Storm grey / Orange	424C / 1505C
Black / Storm grey	Black / 424C
White / Storm grey	White / 424C

COMPOSITION :

Main fabric : Interlock Cool Plus 145 100%polyester 'Cool Plus'
Main fabric : Interlock Cool Plus 145 For contrasted yokes 100%polyester 'Cool Plus'

WEIGHT :

Main fabric : 145 gsm
Main fabric : 145 gsm

FABRIC CONSTRUCTION AND FINISHING :

Moisture control fabric

DESCRIPTION

Français :	T-shirt homme manches longues respirant à séchage rapide
English :	Long sleeve performance zip-neck T-shirt
Nederlands :	Sneldrogend ademend heren met lange mouwen
Deutsch :	Atmungsaktives und schnelltrocknendes langarm herren-shirt
Español :	Camiseta de manga larga transpirable y de secado ràpido
Italiano :	T-shirt uomo maniche lunghe asciugatura rapida
Português :	T-shirt de treino manga comprida

MEASUREMENT

Description	M	L	XL	XXL			
H05 Hauteur totale / Total height	70,50	72,50	74,55	77,30			
W05 1/2 largeur poitrine / 1/2 chest width	52,10	55,10	58,10	62,10			
H15 Longueur manche / Sleeve length	74,40	76,55	78,70	81,85			

PACKING

Box	25 pcs / box M => L:52cm W:39cm H:20cm GW:5.80kg NW:4.80kg L => L:52cm W:39cm H:20cm GW:6.20kg NW:5.20kg XL => L:56cm W:39cm H:20cm GW:6.80kg NW:5.60kg XXL => L:56cm W:39cm H:20cm GW:7.20kg NW:6.00kg

CARE LABEL

deetex.de

KARIBAN SPORT

REFERENCE : KS022

NAME :

SIZES : S_M_L_XL

COMPOSITION :

Main fabric : Interlock Cool Plus 145 100%polyester 'Cool Plus'
Main fabric : Interlock Cool Plus 145 For contrasted yokes 100%polyester 'Cool Plus'

WEIGHT :

Main fabric : 145 gsm
Main fabric : 145 gsm

FABRIC CONSTRUCTION AND FINISHING :

Moisture control fabric

COLORS	PANTONE SERIGRAPHIE
Storm grey / Orange	424C / 1505C
Black / Storm grey	Black / 424C
White / Storm grey	White / 424C

DESCRIPTION

Français :	T-shirt femme manches longues respirant à séchage rapide
English :	Ladies long sleeve performance zip-neck T-shirt
Nederlands :	Sneldrogend ademend dames T-shirt met lange mouwen
Deutsch :	Atmungsaktives und schnelltrocknendes langarm damen-shirt
Español :	Camiseta de manga larga transpirable y de secado ràpido para mujer
Italiano :	T-shirt donna maniche lunghe asciugatura rapida
Português :	T-shirt de treino de senhora de manga comprida

MEASUREMENT

Description	S	M	L	XL			
H05 Hauteur totale / Total height	65,05	66,60	68,10	70,40			
W05 1/2 largeur poitrine / 1/2 chest width	46,05	48,05	50,05	53,05			
H15 Longueur manche / Sleeve length	72,20	73,50	74,85	76,80			

PACKING

Box	25 pcs / box S => L:46cm W:38cm H:18cm GW:5.20kg NW:4.30kg M => L:56cm W:36cm H:18cm GW:5.30kg NW:4.40kg L => L:50cm W:39cm H:18cm GW:5.60kg NW:4.60kg XL => L:50cm W:39cm H:18cm GW:5.90kg NW:4.90kg

CARE LABEL

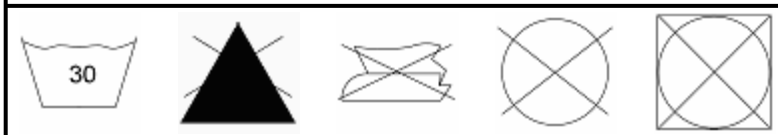

deetex.de

KARIBAN SPORT

REFERENCE : KS025

NAME :

SIZES : XS_S_M_L_XL_XXL

COMPOSITION :

Main fabric : Polyester birdeyes 140 For body and collar
100%polyester

COLORS	PANTONE SERIGRAPHIE
White	White
Red	186C
Navy	2965C
Black	Black

WEIGHT :

Main fabric : 140 gsm

FABRIC CONSTRUCTION AND FINISHING :

Birdeyes

DESCRIPTION

Français :	T-shirt homme manches longues
English :	Long sleeve sport T-shirt
Nederlands :	Heren T-shirt met lange mouwen
Deutsch :	Herren langarm-shirt
Español :	Camiseta de manga larga
Italiano :	T-shirt uomo maniche lunghe
Português :	T-shirt de desporto de manga comprida

MEASUREMENT

Description	XS	S	M	L	XL	XXL	
H05 Hauteur totale du point épaule / Total height from shoulder point	66,60	68,60	70,60	72,60	74,60	77,35	
W05 1/2 largeur poitrine / 1/2 chest width	45	48	51	54	57	61	
H15 Longueur manche / Sleeve length	59	61	63	65	67	69,20	

PACKING

Box	25 pcs / box XS => L:50cm W:39cm H:14cm GW:5.20kg NW:4.20kg S => L:50cm W:39cm H:14cm GW:5.50kg NW:4.50kg M => L:54cm W:39cm H:14cm GW:6.10kg NW:4.70kg L => L:54cm W:39cm H:14cm GW:6.40kg NW:5.00kg XL => L:58cm W:39cm H:14cm GW:6.80kg NW:5.40kg XXL => L:58cm W:39cm H:14cm GW:7.20kg NW:5.80kg

CARE LABEL

deetex.de

KARIBAN SPORT

REFERENCE : KS026

NAME :

SIZES : S_M_L_XL_XXL_3XL_4XL

COMPOSITION :

Main fabric : Polyester / Lycra Pique 180 95% polyester / 5% lycra

COLORS	PANTONE SERIGRAPHIE
Black / Lime	Black / 374C
Lagoon / Black	2915C / Black
White / Silver	White / 430C
French navy / Silver	2965C / 430C
Dark grey / Black	432C / Black

WEIGHT :

Main fabric : 180 gsm

FABRIC CONSTRUCTION AND FINISHING :

Moisture management properties (Quick drying and breathable fabric)

DESCRIPTION

Français :	Polo homme pique Lycra® manches courtes
English :	Short sleeve Lycra® polo shirt
Nederlands :	Heren polo Lycra® pique met korte mouwen
Deutsch :	Lycra® herren polo
Español :	Polo Lycra® pique de manga corta
Italiano :	Polo uomo Lycra® maniche corte
Português :	Polo Lycra® de manga curta

CARE LABEL

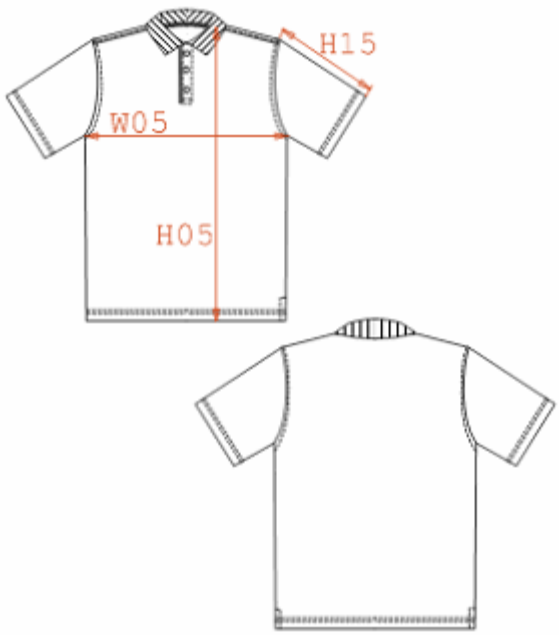

MEASUREMENT

Description	S	M	L	XL	XXL	3XL	4XL
H05 Hauteur totale / Total height	70,80	72,80	74,80	76,80	78,80	81,60	84,35
W05 1/2 largeur poitrine / 1/2 chest width	47	50	53	56	59	63	67
H15 Longueur manche / Sleeve length	21,50	22,50	23,50	24,50	25,40	26,55	27,75

PACKING

Box	25 pcs / box S => L:54cm W:39cm H:13cm GW:6.00kg NW:4.60kg M => L:54cm W:39cm H:13cm GW:6.70kg NW:5.30kg L => L:58cm W:39cm H:13cm GW:6.90kg NW:5.50kg XL => L:58cm W:39cm H:13cm GW:7.10kg NW:5.60kg XXL => L:60cm W:39cm H:13cm GW:7.60kg NW:6.10kg 3XL => L:60cm W:39cm H:13cm GW:8.30kg NW:6.70kg 4XL => L:62cm W:39cm H:13cm GW:8.60kg NW:7.00kg

teetex.de

KARIBAN SPORT

REFERENCE : KS03

NAME :

SIZES : XS_S_M_L_XL_XXL_3XL

COMPOSITION :

Main fabric : Interlock Cool Plus 145 For body, collar, neckline tape and front middle piping. 100%polyester 'Cool Plus'
Main fabric : Interlock Cool Plus 145 For side yokes 100%polyester 'Cool Plus'
Main fabric : Interlock Cool Plus 145 For front and back yokes 100%polyester 'Cool Plus'

WEIGHT :

Main fabric : 145 gsm
Main fabric : 145 gsm
Main fabric : 145 gsm

COLORS	PANTONE SERIGRAPHIE
White / Grey / Lime	White / 7539C/ 381C
Orange / Grey / White	158C / 7539C / White
Sky blue / Grey / White	277C / 7539C / White
Navy / Grey	296C / 7539C
Black / Grey	Black / 7539C
Red / Grey	186C / 7539C

DESCRIPTION

Français :	Polo col zippé respirant à séchage rapide
English :	Performance zip neck polo
Nederlands :	Ademende sneldroge polo met rits
Deutsch :	Schnell trocknendes atmungsaktives polohemd
Español :	Polo con cremallera en el cuello
Italiano :	Polo con zip a asiugatura rapida
Português :	Polo com fecho de desporto

CARE LABEL

MEASUREMENT

Description	XS	S	M	L	XL	XXL	3XL
H05 Hauteur totale / Total height	65,75	67,85	69,95	72,05	74,15	77,05	79,95
W05 1/2 largeur poitrine / 1/2 chest width	46	49	52	55	58	62	66
H15 Longueur manche / Sleeve length	32,60	34,45	36,30	38,20	40	42,45	44,85

PACKING

Box	25 pcs / box XS => L:56cm W:39cm H:18cm GW:5.40kg NW:4.00kg S => L:56cm W:39cm H:18cm GW:5.60kg NW:4.20kg M => L:56cm W:39cm H:18cm GW:5.70kg NW:4.30kg L => L:56cm W:39cm H:18cm GW:5.90kg NW:4.60kg XL => L:62cm W:39cm H:18cm GW:6.40kg NW:4.90kg XXL => L:62cm W:39cm H:18cm GW:6.80kg NW:5.30kg 3XL => L:64cm W:39cm H:18cm GW:7.30kg NW:5.60kg

cleetex.de

KARIBAN SPORT

REFERENCE : KS030

NAME :

SIZES : XS_S_M_L_XL

COMPOSITION :

Main fabric : Polyester birdeyes 140 100%polyester

WEIGHT :

Main fabric : 140 gsm

FABRIC CONSTRUCTION AND FINISHING :

Birdseye

COLORS	PANTONE SERIGRAPHIE
White	White
Red	186C
Black	Black
Lime	374C
Orange	1505C
Aqua blue	3005C
Sand	7529C
Olive	749C
Sky blue	277C
Fine grey	Cool gray 7C
True Yellow	116C
Violet	2745C
Dark pink	210C
Fluorescent yellow	809C

DESCRIPTION

Français :	T-shirt femme manches courtes
English :	Ladies short sleeve T-shirt
Nederlands :	Dames T-shirt met mouwen
Deutsch :	Polyester T-shirt für Damen
Español :	Camiseta de manga corta para mujer
Italiano :	T-shirt donna maniche corte
Português :	T-shirt de denhora de manga curta

CARE LABEL

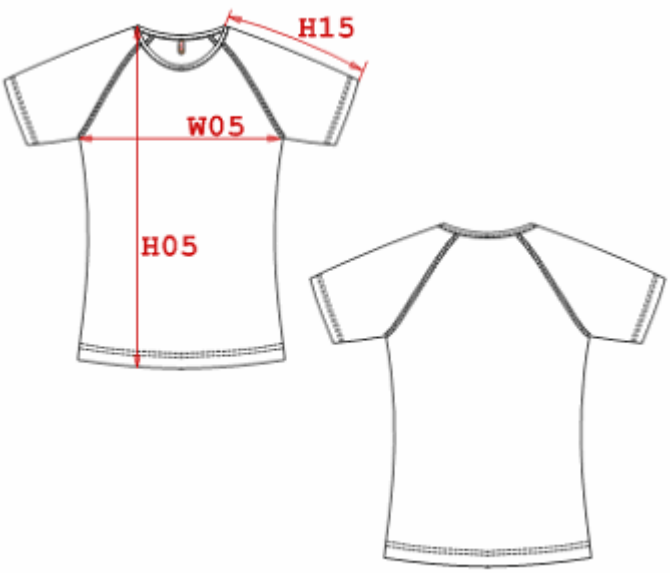

MEASUREMENT

Description	XS	S	M	L	XL		
H05 Hauteur totale/total height	62,10	63,65	65,20	67,45	69,80		
W05 1/2 largeur poitrine/1/2 chest width	43,10	45,10	47,10	50,10	53,10		
H15 Longueur dessus de manche +épaule / Outtter sleeve length + shoulder	25	26,50	28	30	32		

PACKING

Box	50 pcs / box XS=> L:46cm W:39cm H:18cm GW:6.00kg NW:5.00kg S=> L:46cm W:39cm H:18cm GW:6.30kg NW:5.30kg M=> L:48cm W:39cm H:18cm GW:6.50kg NW:5.50kg L=> L:52cm W:39cm H:18cm GW:7.20kg NW:6.00kg XL=> L:52cm W:39cm H:18cm GW:7.70kg NW:6.50kg

fleetex.de

KARIBAN SPORT

REFERENCE : KS031

NAME :

SIZES : XS_S_M_L_XL

COMPOSITION :

Main fabric : Polyester birdeyes 140 100%polyester

WEIGHT :

Main fabric : 140 gsm

FABRIC CONSTRUCTION AND FINISHING :

Birdseye

COLORS	PANTONE SERIGRAPHIE
White	White
Orange	1505C
Aqua blue	3005C
Lime	374C
True Yellow	116C
Red	186C
Black	Black
Violet	2745C
Dark pink	210C
Fluorescent yellow	809C

DESCRIPTION

Français :	Débardeur femme
English :	Ladies vest
Nederlands :	Dames tanktop
Deutsch :	Polyester Ärmelloses T-shirt für Damen
Español :	Camiseta sin mangas para mujer
Italiano :	Canottiera donna
Português :	Top de desporto

MEASUREMENT

Description	XS	S	M	L	XL		
H05 Hauteur totale / Total height	**58,65**	**60,15**	**61,65**	**63,90**	**66,15**		
W05 1/2 largeur poitrine / 1/2 chest width	**40,50**	**42,50**	**44,50**	**47,50**	**50,50**		

PACKING

Box	50 pcs / box XS => L:44cm W:36cm H:18cm GW:5.00kg NW:4.00kg S=> L:44cm W:36cm H:18cm GW:5.20kg NW:4.20kg M=> L:48cm W:36cm H:18cm GW:5.70kg NW:4.40kg L=> L:52cm W:36cm H:18cm GW:6.00kg NW:4.70kg XL=> L:52cm W:36cm H:18cm GW:6.20kg NW:5.00kg

CARE LABEL

deetex.de

KARIBAN SPORT

REFERENCE : KS032

NAME :

SIZES : 6/8_8/10_10/12_12/14

COMPOSITION :

Main fabric : Polyester birdeyes 140 100%polyester

COLORS	PANTONE SERIGRAPHIE
White	White
Red	186C
Navy	2965C
Lime	374C
Orange	1505C
Sky blue	277C

WEIGHT :

Main fabric : 140 gsm

FABRIC CONSTRUCTION AND FINISHING :

Birdeyes

DESCRIPTION

Français :	T-shirt enfant manches courtes
English :	Kids short sleeve T-shirt
Nederlands :	T-shirt kids met korte mouwen
Deutsch :	Polyester T-shirt für Kinder
Español :	Camiseta de manga corta para niños
Italiano :	T-shirt maniche corte bambino
Português :	T-shirt de desporto de criança

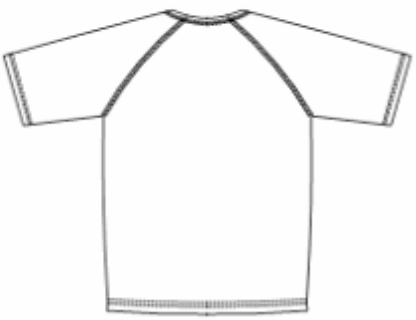

MEASUREMENT

Description	6/8	8/10	10/12	12/14			
H05 Hauteur totale / Total height	52,55	57,65	62,80	67,95			
W05 1/2 largeur poitrine / 1/2 chest width	37	40	43	46			
H15 Longueur manche / Sleeve length	25,20	27	28,80	30,60			

PACKING

Box	50 pcs / box 6/8 => L:42cm W:34cm H:20cm GW:5.50kg NW:4.50kg 8/10 => L:42cm W:34cm H:20cm GW:5.80kg NW:4.80kg 10/12 => L:46cm W:34cm H:20cm GW:6.20kg NW:5.00kg 12/14 => L:46cm W:34cm H:20cm GW:6.60kg NW:5.40kg

CARE LABEL

sleetex.de

KARIBAN SPORT

REFERENCE : KS033

NAME :

SIZES : S_M_L_XL_XXL_3XL

COMPOSITION :

Main fabric : Interlock pique 145 For body and collar
100%polyester

WEIGHT :

Main fabric : 145 gsm

FABRIC CONSTRUCTION AND FINISHING :

Interlock pique

COLORS	PANTONE SERIGRAPHIE
White / Light grey	White / 7543C
Black / Lime	Black / 374C
Storm grey / Orange	424C / 1505C
Navy / White	2965C / White
Black / Orange	Black / 1505C
Sky blue / Light grey	277C / 7543C
Lime / Light grey	374C / 7543C
Orange / Light grey	1505C / 7543C

DESCRIPTION

Français :	T-shirt homme manches courtes
English :	Short sleeve T-shirt
Nederlands :	Heren T-shirt met korte mouwen
Deutsch :	Polyester Pique T-shirt für Herren
Español :	Camiseta de manga corta
Italiano :	T-shirt uomo maniche corte
Português :	T-shirt de manga curta

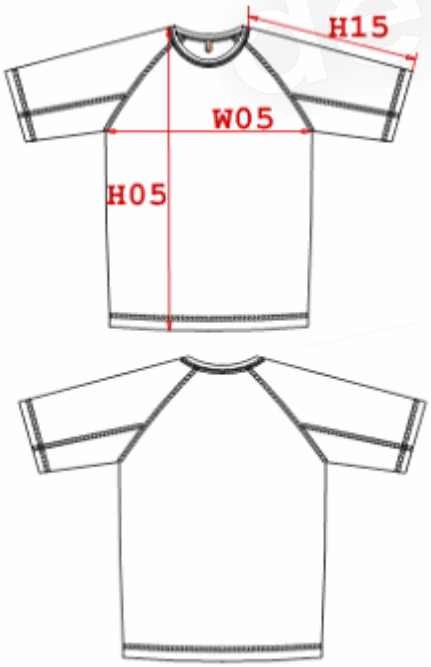

MEASUREMENT

Description	S	M	L	XL	XXL	3XL	
H05 Hauteur totale / Total height	70,35	72,45	74,55	76,65	79,50	82,40	
W05 1/2 largeur poitrine / 1/2 chest width	47	50	53	56	60	64	
H15 Longueur manche / Sleeve length	32,95	34,80	36,70	38,55	40,90	43,30	

PACKING

Box	50 pcs / box S => L:52cm W:39cm H:20cm GW:7.80kg NW:6.60kg M => L:52cm W:39cm H:20cm GW:8.20kg NW:7.00kg L => L:56cm W:39cm H:20cm GW:8.70kg NW:7.30kg XL => L:56cm W:39cm H:20cm GW:9.10kg NW:7.70kg XXL => L:60cm W:39cm H:20cm GW:9.50kg NW:8.00kg 3XL => L:60cm W:39cm H:20cm GW:9.90kg NW:8.40kg

CARE LABEL

cleetex.de

KARIBAN SPORT

REFERENCE : KS034

NAME :

SIZES : XS_S_M_L_XL

COMPOSITION :

Main fabric : Interlock pique 145 For body and collar
100%polyester

WEIGHT :

Main fabric : 145 gsm

FABRIC CONSTRUCTION AND FINISHING :

Interlock pique

COLORS	PANTONE SERIGRAPHIE
White / Light grey	White / 7543C
Black / Lime	Black / 374C
Storm grey / Orange	424C / 1505C
Navy / White	2965C / White
Black / Orange	Black / 1505C
Sky blue / Light grey	277C / 7543C
Lime / Light grey	374C / 7543C
Orange / Light grey	1505C / 7543C

DESCRIPTION

Français :	T-shirt femme manches courtes
English :	Ladies short sleeve T-shirt
Nederlands :	Dames T-shirt met korte mouwen
Deutsch :	Polyester Pique T-shirt für Damen
Español :	Camiseta de manga corta para mujer
Italiano :	T-shirt donna maniche corte
Português :	T-shirt de senhora de manga curta

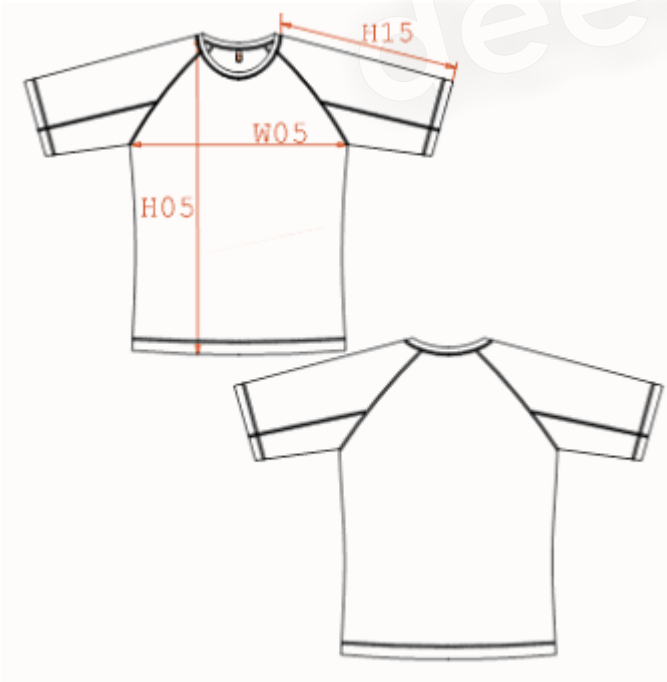

MEASUREMENT

Description	XS	S	M	L	XL		
H05 Hauteur totale / Total height	62,10	63,65	65,15	67,45	69,75		
W05 1/2 largeur poitrine / 1/2 chest width	41,10	43,10	45,10	48,10	51,10		
H15 Longueur manche / Sleeve length	26,90	28,40	29,90	31,90	33,90		

PACKING

Box	50 pcs / box XS => L:42cm W:34cm H:26cm GW:6.30kg NW:5.30kg S => L:42cm W:34cm H:26cm GW:6.60kg NW:5.60kg M => L:46cm W:34cm H:26cm GW:7.20kg NW:6.00kg L => L:52cm W:34cm H:26cm GW:7.80kg NW:6.40kg XL => L:52cm W:34cm H:26cm GW:8.10kg NW:6.70kg

CARE LABEL

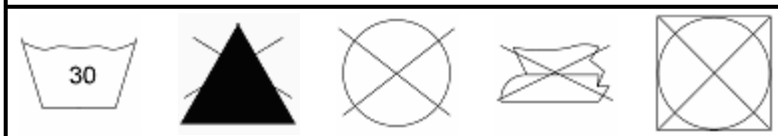

sleetex.de

KARIBAN SPORT

REFERENCE : KS035

NAME :

SIZES : XS_S_M_L_XL_XXL_3XL

COMPOSITION :

Main fabric : Interlock pique 145 For body, collar and inner back middle neckline binding. 100%polyester

COLORS	PANTONE SERIGRAPHIE
White	White
Orange	1505C
Black	Black
Aqua blue	3005C
Fluorescent yellow	809C
Navy	2965C
Red	186C

WEIGHT :

Main fabric : 145 gsm

FABRIC CONSTRUCTION AND FINISHING :

Interlock pique

DESCRIPTION

Français :	T-shirt homme demi-zip
English :	Half zip T-shirt
Nederlands :	Heren T-shirt met rits
Deutsch :	Half Zip Herren T-shirt
Español :	Camiseta de cuarta cremallera
Italiano :	T-shirt uomo mezzo zip
Português :	T-shirt com fecho

CARE LABEL

MEASUREMENT

Description	XS	S	M	L	XL	XXL	3XL
H05 Hauteur totale / Total height	68,20	70,30	72,40	74,50	76,60	79,50	82,40
W05 1/2 largeur poitrine / 1/2 chest width	45	48	51	54	57	61	65
H15 Longueur manche / Sleeve length	31,15	33,15	35,15	37,15	39,15	41,15	43,15

PACKING

Box	50 pcs / box XS => L:50cm W:39cm H:20cm GW:6.70kg NW:5.50kg S => L:50cm W:39cm H:20cm GW:7.20kg NW:6.00kg M => L:54cm W:39cm H:20cm GW:8.90kg NW:7.50kg L => L:54cm W:39cm H:20cm GW:9.40kg NW:8.00kg XL => L:58cm W:39cm H:20cm GW:10.00kg NW:8.50kg XXL => L:58cm W:39cm H:20cm GW:10.50kg NW:9.00kg 3XL => L:62cm W:39cm H:20cm GW:11.10kg NW:9.50kg

KARIBAN SPORT

REFERENCE : KS07

NAME :

SIZES : S_M_L_XL_XXL

COLORS	PANTONE SERIGRAPHIE
White	White
Black	Black

COMPOSITION :

Fabric 1 : Polyester / Elastane - Quick Dry 80%polyester / 20%elastane
Mesh : Mesh 155 For yokes 100%polyester

WEIGHT :

Fabric 1 : 180 gsm
Mesh : 155 gsm

FABRIC CONSTRUCTION AND FINISHING :

Moisture control fabric

DESCRIPTION

Français :	T-shirt manches longues bi-matière "Quick Dry"
English :	Performance long sleeves T-shirt
Nederlands :	T-shirt met lange mouwen in dubbele "Quick Dry" stof
Deutsch :	"Quick Dry" Langarm T-Shirt
Español :	Camiseta de manga larga bimatiera " Quick Dry"
Italiano :	T-shirt maniche lunghe "Quick Dry"
Português :	T-shirt de treino manga comprida

deetex.de

MEASUREMENT

Description	S	M	L	XL	XXL		
H05 Hauteur totale dvt/ Front total height	64,30	66,45	68,55	70,70	73,65		
W05 1/2 largeur poitrine/1/2 chest width	40,70	43,70	46,70	49,70	53,70		
H15 Longueur dessus de manche / Outer sleeve length + shoulder	68,30	71,25	74,10	76,95	80,30		

PACKING

Box	25 pcs / box S => L:50cm W:40cm H:13cm GW:6.00kg NW:5.00kg M => L:50cm W:40cm H:13cm GW:6.00kg NW:5.00kg L => L:50cm W:40cm H:13cm GW:6.00kg NW:5.00kg XL => L:50cm W:40cm H:13cm GW:6.00kg NW:5.00kg XXL => L:50cm W:40cm H:13cm GW:6.00kg NW:5.00kg

CARE LABEL

KARIBAN SPORT

REFERENCE : KS08

NAME :

SIZES : S_M_L_XL

COLORS	PANTONE SERIGRAPHIE
Black / Black	Black / Black

COMPOSITION :

Main fabric : Jersey Cool Comfort 250 For body, neck and armholes. 92%polyester/ 8%elastane
Mesh : Mesh 155 Side yokes 100%polyester

WEIGHT :

Main fabric : 250 gsm
Mesh : 155 gsm

FABRIC CONSTRUCTION AND FINISHING :

Moisture control fabric

DESCRIPTION

Français :	Débardeur col V "Cool Comfort"
English :	Ladies performance V neck tank vest
Nederlands :	Débardeur met V kraag en "Cool Comfort"
Deutsch :	"Cool Comfort" ärmelloses T-shirt
Español :	Camiseta sin mangas escote de pico para mujer " Cool Comfort"
Italiano :	Canottiera scollo a V " Cool Comfort "
Português :	Top de senhora decote

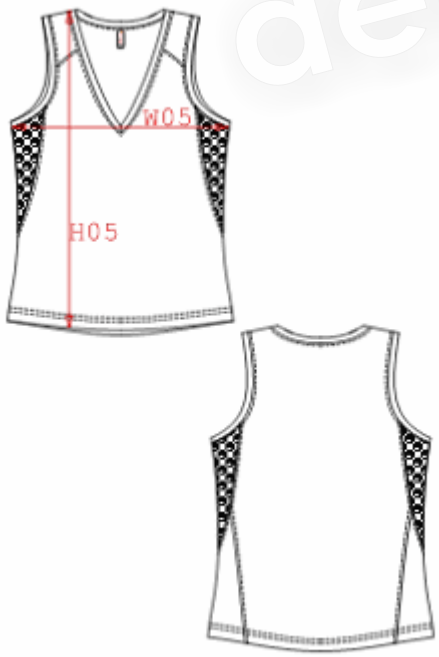

MEASUREMENT

Description	S	M	L	XL			
H05 Hauteur totale/total height	54	55,50	57	58,70			
W05 1/2 largeur poitrine/1/2 chest width	38,85	40,85	42,85	45,85			

PACKING

Box	25 pcs / box S => L:46cm W:29cm H:22cm GW:4.50kg NW:3.50kg M => L:46cm W:29cm H:22cm GW:4.50kg NW:3.50kg L => L:46cm W:29cm H:22cm GW:4.50kg NW:3.50kg XL => L:46cm W:29cm H:22cm GW:4.50kg NW:3.50kg

CARE LABEL

deetex.de

KARIBAN SPORT

REFERENCE : KS09

NAME :

SIZES : S_M_L_XL

COLORS	PANTONE SERIGRAPHIE
Dark grey / Orange	447C / 1495C
Black / Black	Black / Black

COMPOSITION :

Main fabric : Jersey Cool Comfort 250 92%polyester/ 8%elastane
Mesh : Mesh 155 For side and back yokes 100%polyester
Bra : Polyester 115 For inner bra 100%polyester

WEIGHT :

Main fabric : 250 gsm
Mesh : 155 gsm
Bra : 115 gsm

FABRIC CONSTRUCTION AND FINISHING :

Moisture control fabric

DESCRIPTION

Français :	Débardeur avec brassière " Cool Comfort "
English :	Ladies performance Crew-Neck vest with bra
Nederlands :	Débardeur met schouderbanden "Cool Comfort"
Deutsch :	"Cool Comfort" ärmelloses T-shirt mit bustier
Español :	Camiseta sin mangas con almilla para mujer "Cool Comfort"
Italiano :	Canottiera "Cool Comfort "
Português :	Top de senhora decote redondo

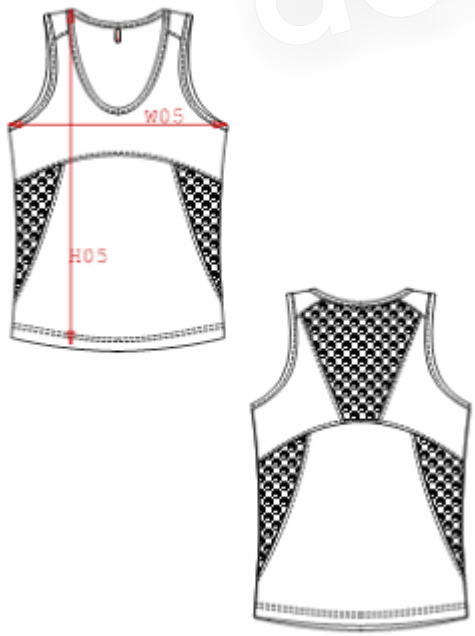

MEASUREMENT

Description	S	M	L	XL			
H05 Hauteur totale/total height	52,50	54	55,50	57			
W05 1/2 largeur poitrine/1/2 chest width	39	41	43	46			

PACKING

Box	25 pcs / box S => L:46cm W:29cm H:22cm GW:5.00kg NW:4.00kg M => L:46cm W:29cm H:22cm GW:5.00kg NW:4.00kg L => L:46cm W:29cm H:22cm GW:5.00kg NW:4.00kg XL => L:46cm W:29cm H:22cm GW:5.00kg NW:4.00kg

CARE LABEL

deetex.de

KARIBAN SPORT

REFERENCE : KS101

NAME :

SIZES : XS_S_M_L_XL_XXL_3XL

COMPOSITION :

Main fabric : Polyester 100 100%polyester

COLORS	PANTONE SERIGRAPHIE
Navy	2965C
White	White
Black	Black
Grey	447C

WEIGHT :

Main fabric : 100 gsm

FABRIC CONSTRUCTION AND FINISHING :

With moisture wicking

DESCRIPTION

Français :	Pantacourt homme
English :	3/4 trousers
Nederlands :	Herenkuitbroek
Deutsch :	Caprihose fur herren
Español :	Pantalon corto para hombre
Italiano :	Pantalone 3/4 uomo
Português :	Corsário de homen

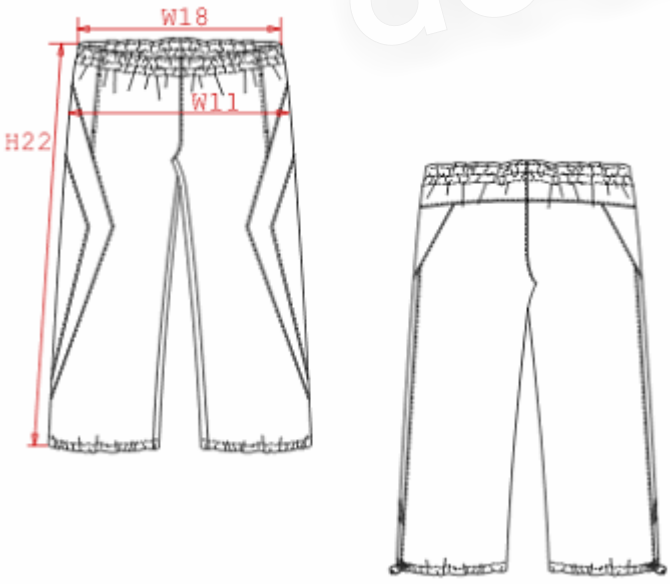

MEASUREMENT

Description	XS	S	M	L	XL	XXL	3XL
W18 1/2 taille élastiquée / 1/2 elasticated waist	29	30	32	35	38	42	46
W11 1/2 bassin / 1/2 hip width	49,05	51,85	54,65	57,45	60,35	64,10	67,85
H22 Longueur côté ceinture comprise / Side length waist included	75,65	77,40	79,15	80,85	82,60	84,60	86,50

PACKING

Box	25 pcs / box XS-3XL => L:39cm W:34cm H:23cm GW:6.00kg NW:5.00kg

CARE LABEL

deetex.de

KARIBAN SPORT

REFERENCE : KS102

NAME :

SIZES : XS_S_M_L_XL_XXL_3XL

COMPOSITION :

Main fabric : Polyester 100 100%polyester
Mesh : Mesh 65 For inner brief 100%polyester

COLORS	PANTONE SERIGRAPHIE
Navy	2965C
White	White
Black	Black
Grey	447C
Red	186C

WEIGHT :

Main fabric : 100 gsm
Mesh : 65 gsm

FABRIC CONSTRUCTION AND FINISHING :

With moisture wicking

DESCRIPTION

Français :	Short homme
English :	Men's short
Nederlands :	Herenshort
Deutsch :	Herren Short
Español :	Short para hombre
Italiano :	Short per uomo
Português :	Calção

deetex.de

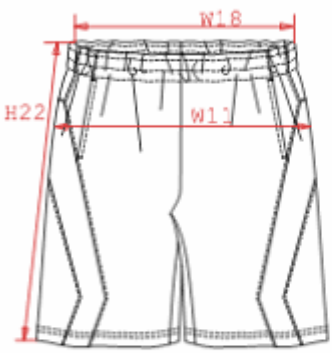

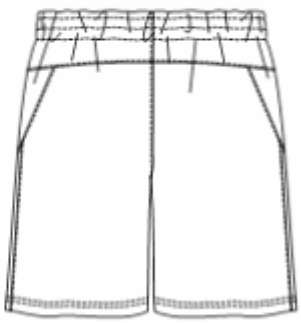

MEASUREMENT

Description	XS	S	M	L	XL	XXL	3XL
W18 1/2 taille élastiquée / 1/2 elasticated waist	29	30	32	35	38	42	46
W11 1/2 bassin / 1/2 hip width	47,30	50,20	53,10	56	58,90	62,65	66,45
H22 Longueur côté ceinture comprise / Side length waist included	43,40	45,15	46,90	48,65	50,40	52,40	54,40

PACKING

Box	25 pcs / box XS-3XL => L:39cm W:34cm H:21cm GW:5.5kg NW:4.5kg

CARE LABEL

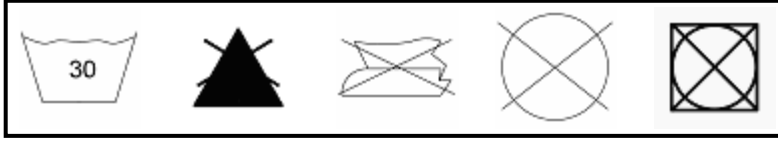

KARIBAN SPORT

REFERENCE : KS106

NAME :

SIZES : XS_S_M_L_XL_XXL_3XL

COMPOSITION :

Main fabric : Polyester microfiber 115 For jacket
100%polyester
Mesh : Mesh 65 For inner jacket 100%polyester

WEIGHT :

Main fabric : 115 gsm
Mesh : 65 gsm

FABRIC CONSTRUCTION AND FINISHING :

4306 Micro peach

COLORS	PANTONE SERIGRAPHIE
White / Grey / Grey	White / Cool Gray 8C
Navy / White / Navy	2965C / White / 2965C
Black / Red / Black	Black / 186C / Black
Red / White / Red	186C / White / 186C
Dark grey/ Black/ Black	446C / Black / Black
Navy / Royal blue / Navy	2965C / Blue C / 2965C

DESCRIPTION

Français :	Survêtement bicolore
English :	Bi-colour Tracksuit
Nederlands :	Tweekleuring trainingspak
Deutsch :	Zweifärbiger Sportanzug
Español :	Chandal bicolor
Italiano :	Tuta bicolore
Português :	Fato de treino bicolor

deetex.de

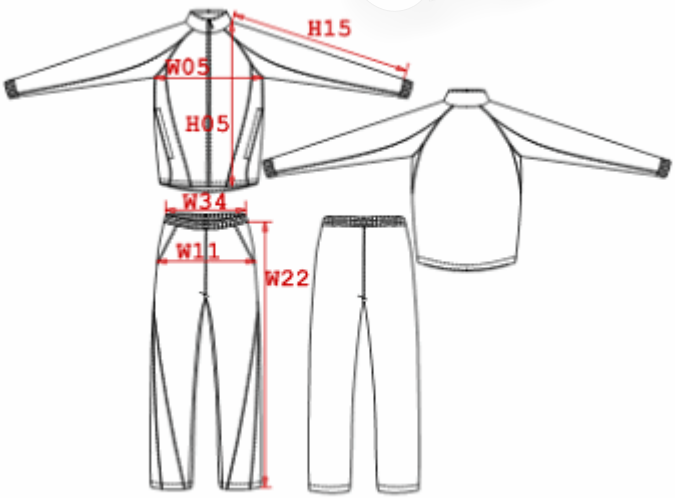

MEASUREMENT

Description	XS	S	M	L	XL	XXL	3XL
TRACKSUIT VEST							
H05 Hauteur totale / Total height	68,50	70,70	72,90	75,15	77,35	80,40	83,50
W05 1/2 largeur poitrine / 1/2 chest width	52	55	58	61	64	68	72
H15 Longueur manche / Sleeve length	75,45	78,20	80,95	83,70	86,45	89,65	92,90
TRACKSUIT PANT							
H34 1/2 taille élastiqué /1/2 elasticated waist	32	34	36	38	41	43	47
W11 1/2 bassin / 1/2 hip width	47,85	50,85	53,85	56,85	59,85	63,85	67,85
H22 Longueur côté sans ceinture / Side length without waistband	97,10	100	102,90	105,80	108,70	111,95	115,15

PACKING

Box	10 pcs / box XS-3XL => L:51cm W:38cm H:20cm GW:8.20kg NW:6.70kg

CARE LABEL

KARIBAN SPORT

REFERENCE : KS108

NAME :

SIZES : S_M_L_XL

COLORS	PANTONE SERIGRAPHIE
Turquoise / White	3125C / White
White / White	White / White

COMPOSITION :

Main fabric : Polyester 100 100%polyester
Main fabric : Polyester 100 For yokes 100%polyester

WEIGHT :

Main fabric : 100 gsm
Main fabric : 100 gsm

FABRIC CONSTRUCTION AND FINISHING :

With moisture wicking

DESCRIPTION

Français :	Pantacourt femme
English :	Ladies 3/4 trousers
Nederlands :	Dames kuitbroek
Deutsch :	Caprihose für damen
Español :	Pantalon corto para mujer
Italiano :	Pantalone 3/4 donna
Português :	Corsário de senhora

MEASUREMENT

Description	S	M	L	XL			
W18 1/2 taille élastiquée / 1/2 elasticated waist	36,60	38,60	40,60	42,60			
W11 1/2 bassin à 15 cm/ 1/2 hip width at 15 cm	47	49	51	53			
H22 Longueur côté ceinture comprise / Side length waist included	76	76,50	77	78,50			

PACKING

Box	25 pcs / box S-XL => L:52cm W:35cm H:12cm GW:4.80kg NW:4.00kg

CARE LABEL

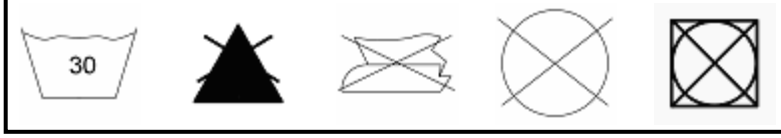

deetex.de

KARIBAN SPORT

REFERENCE : KS109

NAME :

SIZES : S_M_L_XL

COLORS	PANTONE SERIGRAPHIE
Black	Black
Dark grey	447C

COMPOSITION :

Main fabric : Jersey Cool Comfort 250 92%polyester/ 8%elastane
Mesh : Mesh 155 For waistband and bottom leg yokes 100%polyester

WEIGHT :

Main fabric : 250 gsm
Mesh : 155 gsm

FABRIC CONSTRUCTION AND FINISHING :

Cool Comfort, Breathable

DESCRIPTION

Français :	Pantacourt femme "Cool Comfort"
English :	Ladies 3/4 pant "Cool Comfort"
Nederlands :	Dameskuitbroek "Cool Comfort "
Deutsch :	"Cool Comfort" caprihose für damen
Español :	Pantalon pirata "Cool Comfort" para mujer
Italiano :	Pantalone 3/4 donna " Cool Comfort "
Português :	Corsário de senhora "Cool Comfort"

MEASUREMENT

Description	S	M	L	XL			
W18 1/2 taille / 1/2 waist	33,90	35,90	37,85	40,85			
H22 Longueur côté sans ceinture /Side length without waistband	57,70	59,10	60,70	62,50			
H23 Longueur entrejambe / Inside leg length	41,90	42,95	43,95	45			

PACKING

Box	20 pcs / box S => L:33cm W:27cm H:22cm GW:4.50kg NW:3.50kg M => L:33cm W:27cm H:22cm GW:4.50kg NW:3.50kg L => L:33cm W:27cm H:22cm GW:4.50kg NW:3.50kg XL => L:33cm W:27cm H:22cm GW:4.50kg NW:3.50kg

CARE LABEL

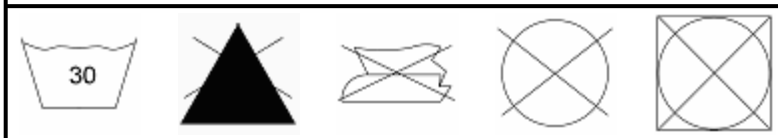

deetex.de

KARIBAN SPORT

REFERENCE : KS110

NAME :

SIZES : S_M_L_XL

COLORS	PANTONE SERIGRAPHIE
Black	Black

COMPOSITION :

Main fabric : Cotton / Elastane 250 92%cotton / 8%elastane

WEIGHT :

Main fabric : 250 gsm

DESCRIPTION	
Français :	Pantacourt femme sport
English :	Ladies 3/4 pant
Nederlands :	Sportieve dameskuitbroek
Deutsch :	Sport caprihose für damen
Español :	Pantalon corto deportivo para mujer
Italiano :	Pantalone 3/4 donna
Português :	Corsário de senhora

MEASUREMENT

Description	S	M	L	XL			
W18 1/2 taille non resserré / 1/2 waist measured flat	35,80	37,80	39,80	42,80			
H22 Longueur côté sans ceinture /Side length without waistband	61,40	62,90	64,40	66,20			
H23 Longueur entrejambe / Inside leg length	47,60	48,65	49,70	50,75			

PACKING

Box	20 pcs / box S => L:58cm W:40cm H:13cm GW:8.00kg NW:7.00kg M => L:58cm W:40cm H:13cm GW:8.00kg NW:7.00kg L => L:58cm W:40cm H:13cm GW:8.00kg NW:7.00kg XL => L:58cm W:40cm H:13cm GW:8.00kg NW:7.00kg

CARE LABEL

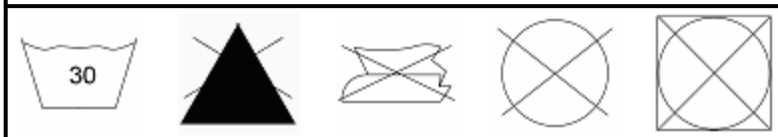

deetex.de

KARIBAN SPORT

REFERENCE : KS111

NAME :

SIZES : S_M_L_XL

COLORS	PANTONE SERIGRAPHIE
Black	Black
Dark grey	447C

COMPOSITION :

Main fabric : Jersey Cool Comfort 250 92%polyester/ 8%elastane
Mesh : Mesh 155 For waistband and top yokes 100%polyester

WEIGHT :

Main fabric : 250 gsm
Mesh : 155 gsm

FABRIC CONSTRUCTION AND FINISHING :

Cool Comfort, breathable

DESCRIPTION

Français :	Pantalon femme "Cool Comfort"
English :	Ladies pant "Cool Comfort"
Nederlands :	Damesbroek "Cool Comfort"
Deutsch :	"Cool Comfort" damen hose
Español :	Pantalon "Cool Comfort" para mujer
Italiano :	Pantalone donna "Cool Comfort"
Português :	Calça de senhora "Cool comfort"

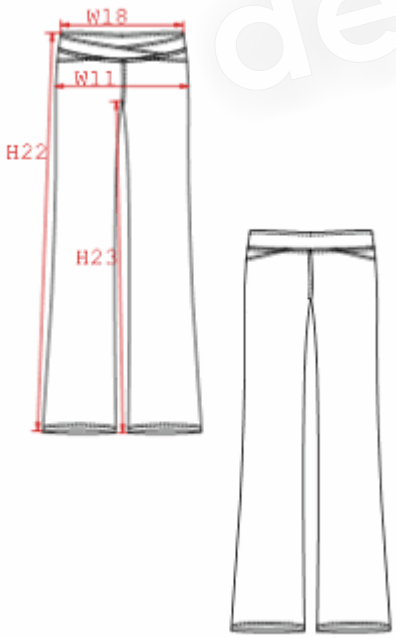

MEASUREMENT

Description	S	M	L	XL			
W18 1/2 taille / 1/2 waist	31,80	33,80	35,80	38,80			
W11 1/2 bassin / 1/2 hip width	39,50	41,50	43,50	46,50			
H22 Longueur côté sans ceinture/Side length without waist	94,55	95	96,55	98,30			
H23 Longueur entrejambe / Inside leg length	79	79	80	81			

PACKING

Box	20 pcs / box S => L:40cm W:30cm H:25cm GW:7.00kg NW:6.00kg M => L:40cm W:30cm H:25cm GW:7.00kg NW:6.00kg L => L:40cm W:30cm H:25cm GW:7.00kg NW:6.00kg XL => L:40cm W:30cm H:25cm GW:7.00kg NW:6.00kg

CARE LABEL

deetex.de

KARIBAN SPORT

REFERENCE : KS115

NAME :

SIZES : 6/8_8/10_10/12_12/14

COMPOSITION :

Main fabric : Polyester microfiber 115 For jacket
100%polyester
Mesh : Mesh 65 For inner jacket 100%polyester

COLORS	PANTONE SERIGRAPHIE
White / Grey / Grey	White / Cool Gray 8C
Black / Red / Black	Black / 186C / Black
Red / White / Red	186C / White / 186C
Navy / Royal blue / Navy	2965C / BlueC /2965C

WEIGHT :

Main fabric : 115 gsm
Mesh : 65 gsm

FABRIC CONSTRUCTION AND FINISHING :

4306 Micro peach

DESCRIPTION

Français :	Survêtement enfant bicolore
English :	Kids sports leisure tracksuit
Nederlands :	Tweekleurig trainingspak kids
Deutsch :	Zweifarbiger Kindersportanzug
Español :	Chándal bicolor para niños
Italiano :	Tuta da sport bambino bicolore
Português :	Fato de treino de criança

CARE LABEL

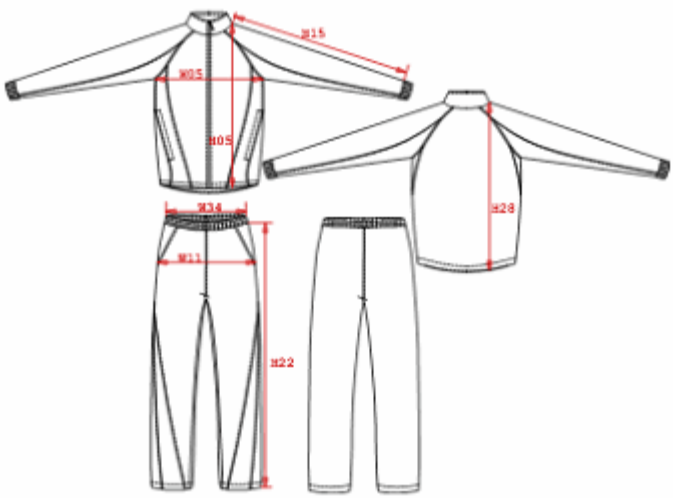

MEASUREMENT

Description	6/8	8/10	10/12	12/14			
TRACKSUIT VEST							
H05 Hauteur totale devant / Front total height	51,35	56,25	61,15	66,05			
W05 1/2 largeur poitrine / 1/2 chest width	40	43	46	49			
H15 Longueur manche sana poignet / Sleeve length without cuff	59,25	63,75	68,25	72,75			
H28 Hauteur totale dos / Back total height	53,40	58,60	63,80	68,95			
TRACKSUIT PANT							
H34 1/2 taille élastiquée /1/2 elasticated waist width	28	30	31	32			
W11 1/2 bassin / 1/2 hip width	41	43	45	47			
H22 Longueur côté sans ceinture / Side length without waistband	73,50	80,45	87,40	94,40			

PACKING

Box	10 pcs / box 6/8-8/10 => L:42cm W:32cm H:20cm GW:6.10kg NW:4.60kg 10/12-12/14 => L:49cm W:37cm H:20cm GW:6.60kg NW:5.10kg

KARIBAN SPORT

REFERENCE : KS116

NAME :

SIZES : M_L_XL_XXL

COMPOSITION :

Main fabric : Polyester 85 100%polyester
Main fabric : Polyester 85 For contrasted yokes 100%polyester
Mesh : Mesh 155 For inner back and under sleeves 100%polyester

WEIGHT :

Main fabric : 85 gsm
Main fabric : 85 gsm
Mesh : 155 gsm

FABRIC CONSTRUCTION AND FINISHING :

Breathable: 3000 gr/m²/24h

COLORS	PANTONE SERIGRAPHIE
Orange / Grey	166C / Cool gray 8C
Black / Grey	Black / Cool gray 8C
Red / Black	186C / Black
Lime / Black	381C / Black
Aqua blue / Black	3005C / Black
Navy / White	296C / White
White / White	White / White

DESCRIPTION

Français :	Coupe-vent homme bicolore
English :	Bi-colour sport jacket
Nederlands :	Tweekleurige heren windbreaker
Deutsch :	Zweifarbige herren-windjacke
Español :	Chaqueta bicolor
Italiano :	Giacca a vento uomo bicolore
Português :	Corta-vento bicolor

deetex.de

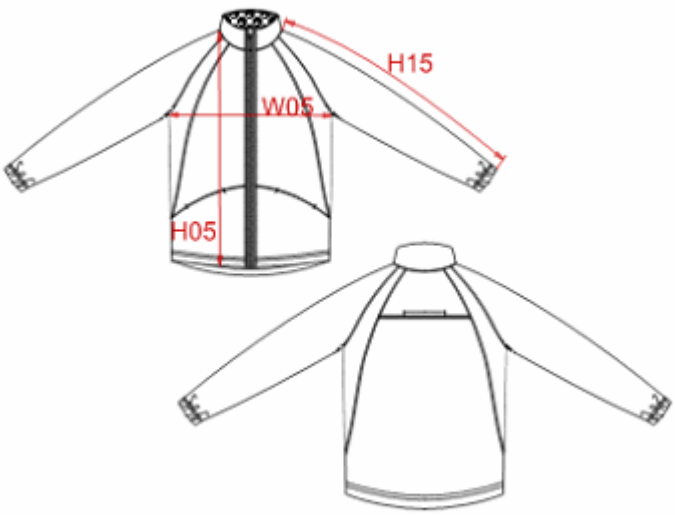

MEASUREMENT

Description	M	L	XL	XXL			
H05 Hauteur totale devant / Front total height	75,50	77,50	79,50	82,25			
W05 1/2 largeur poitrine avec zip / 1/2 chest width with zipper	56	59	62	66			
H15 Longueur manche / Sleeve length	83,25	86	88,75	92			

PACKING

Box	20 pcs / box M => L:62cm W:40cm H:17cm GW:6.50kg NW:5.50kg L => L:62cm W:40cm H:17cm GW:6.50kg NW:5.50kg XL => L:62cm W:40cm H:17cm GW:6.50kg NW:5.50kg XXL => L:62cm W:40cm H:17cm GW:6.50kg NW:5.50kg

CARE LABEL

KARIBAN SPORT

REFERENCE : KS117

NAME :

SIZES : S_M_L_XL

COMPOSITION :

Main fabric : Polyester 85 100%polyester
Main fabric : Polyester 85 For contrasted yokes 100%polyester
Mesh : Mesh 155 For inner back and under sleeves 100%polyester

WEIGHT :

Main fabric : 85 gsm
Main fabric : 85 gsm
Mesh : 155 gsm

FABRIC CONSTRUCTION AND FINISHING :

Breathable: 3000 gr/m²/24h

COLORS	PANTONE SERIGRAPHIE
Orange / Grey	166C / Cool gray 8C
Black / Grey	Black / Cool gray 8C
Red / Black	186C / Black
Lime / Black	381C / Black
Aqua blue / Black	3005C / Black
Navy / White	296C / White
White / White	White / White

DESCRIPTION

Français :	Coupe-vent femme bicolore
English :	Ladies bi-colour sport jacket
Nederlands :	Tweekleurige dames windbreaker
Deutsch :	Zweifarbige damen-windjacke
Español :	Cortaviento bicolor para mujer
Italiano :	Giacca a vento donna bicolore
Português :	Corta-vento bicolor de mulher

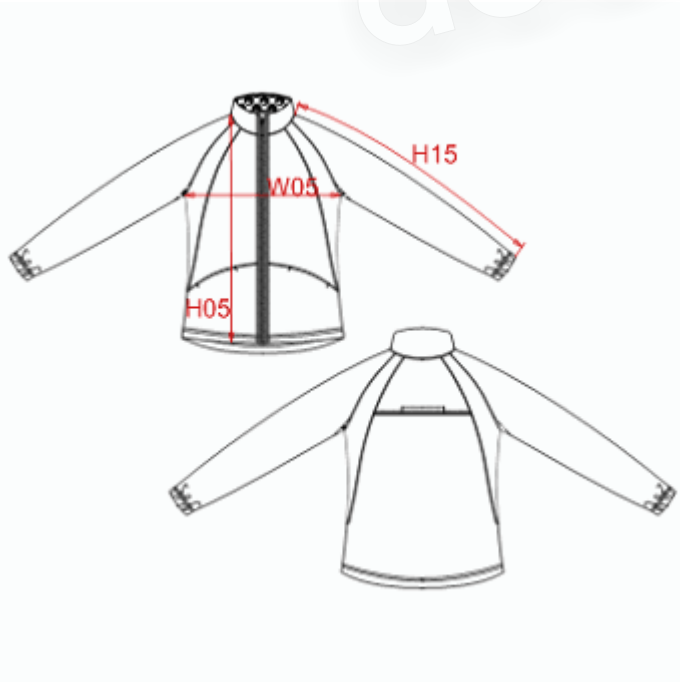

MEASUREMENT

Description	S	M	L	XL			
H05 Hauteur totale devant / Total height	68	69,50	71	73,25			
W05 1/2 largeur poitrine avec zip / 1/2 chest width	50	52	54	57			
H15 Longueur manche / Sleeve length	76,50	77,50	79	81			

PACKING

Box	20 pcs / box S => L:57cm W:37cm H:17cm GW:5.80kg NW:4.80kg M => L:57cm W:37cm H:17cm GW:5.80kg NW:4.80kg L => L:57cm W:37cm H:17cm GW:5.80kg NW:4.80kg XL => L:57cm W:37cm H:17cm GW:5.80kg NW:4.80kg

CARE LABEL

deetex.de

KARIBAN SPORT

REFERENCE : KS201

NAME :

SIZES : U

COLORS	PANTONE SERIGRAPHIE
White / Sky blue	White / 277C

COMPOSITION :

Main fabric : Polyester 110 100%polyester
Fabric 1 : Mesh 105 For contrasted yokes 100%polyester

WEIGHT :

Main fabric : 110 gsm
Fabric 1 : 105 gsm

DESCRIPTION

Français :	Casquette femme
English :	Ladies cap
Nederlands :	Damespet
Deutsch :	Damen kappe
Español :	Gorra de mujer
Italiano :	Cappellino donna
Português :	Boné de desporto de senhora

MEASUREMENT

Description	U						
H10 Tour de tête / Head measurement	58						

PACKING

Box	100 pcs / box U => L:48cm W:46cm H:33cm GW:8.00kg NW:5.60kg

CARE LABEL

deetex.de

KARIBAN SPORT

REFERENCE : KS202

NAME :

SIZES : U

COLORS	PANTONE SERIGRAPHIE
White / Grey / Orange	White / 7539C / 158C

COMPOSITION :

Main fabric : Polyester microfiber 110 100%polyester

WEIGHT :

Main fabric : 110 gsm

DESCRIPTION	
Français :	Casquette sport multicolore
English :	Multicolor sports cap
Nederlands :	Tweekleurige sportpet
Deutsch :	Mehrfarbige sport kappe
Español :	Gorra de deporte multicolor
Italiano :	Cappellino sport multicolore
Português :	Boné de desporto multicolor

deetex.de

MEASUREMENT							
Description	**U**						
H10 Tour de tête / Head measurement	**58**						

PACKING	
Box	100 pcs / box U => L:40cm W:40cm H:30cm GW:7.00kg NW:5.50kg

CARE LABEL

KARIBAN SARL au capital de 100 000 € 13 Avenue du Girou ZAC Eurocentre 31620 Villeneuve Les Bouloc Tél : 00 33 (0)5 61 00 62 00 Fax: 00 33 (0)5 53 84 68 43

KARIBAN SPORT

REFERENCE : KS203

NAME :

SIZES : U

COLORS	PANTONE SERIGRAPHIE
Navy / White	296C / White

COMPOSITION :

Main fabric : Polyester 110 100%polyester
Fabric 1 : Mesh 105 For contrasted yokes 100%polyester

WEIGHT :

Main fabric : 110 gsm
Fabric 1 : 105 gsm

DESCRIPTION	
Français :	Casquette sport bicolore et bi-matière
English :	Bi-colour and two fabric sports cap
Nederlands :	Tweekleurige pet in twee materialen
Deutsch :	Zweifarbige sport-kappe aus doppeltem material
Español :	Gorra de deporte bicolor y bimateria
Italiano :	Cappellino sport bicolore e bi-materia
Português :	Boné de desporto bicolor

MEASUREMENT

Description	U						
H10 Tour de tête / Head measurement	58						

PACKING

Box	100 pcs / box U => L:40cm W:40cm H:30cm GW:7.00kg NW:5.50kg

CARE LABEL

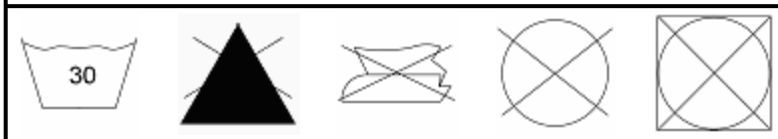

deetex.de

KARIBAN SPORT

REFERENCE : KS204

NAME :

SIZES : U

COLORS	PANTONE SERIGRAPHIE
Black / White	Black / White

COMPOSITION :

Main fabric : Polyester microfiber 110 100%polyester

WEIGHT :

Main fabric : 110 gsm

DESCRIPTION	
Français :	Casquette sport homme bicolore
English :	Bi-colour cap
Nederlands :	Tweekleurige pet
Deutsch :	Zweifarbige kappe
Español :	Gorra bicolor
Italiano :	Cappellino bicolore
Português :	Boné de desporto bicolor

MEASUREMENT							
Description	**U**						
H10 Tour de tête / Head measurement	**58**						

PACKING	
Box	100 pcs / box U => L:52cm W:45cm H:36cm GW:7.90kg NW:5.50kg

CARE LABEL

deetex.de

KARIBAN SPORT

REFERENCE : KS205

NAME :

SIZES : U

COLORS	PANTONE SERIGRAPHIE
White	White

COMPOSITION :

Main fabric : Polyester microfiber 110 100%polyester

WEIGHT :

Main fabric : 110 gsm

DESCRIPTION	
Français :	Casquette homme
English :	7 panel cap
Nederlands :	Pet
Deutsch :	Herren kappe
Español :	Gorra
Italiano :	Cappellino
Português :	Boné de 7 painéis

MEASUREMENT							
Description	**U**						
H10 Tour de tête / Head measurement	**58**						

PACKING	
Box	100 pcs / box U => L:54cm W:45cm H:30cm GW:6.80kg NW:4.90kg

CARE LABEL

deetex.de

KARIBAN SPORT

REFERENCE : KS206

NAME :

SIZES : U

COLORS	PANTONE SERIGRAPHIE
White / Grey	White / 7539C
Black / Lime	Black / 374C
Red / Grey	186C / 7539C

COMPOSITION :

Main fabric : Polyester microfiber 110 100%polyester
Fabric 1 : Mesh 105 100%polyester

WEIGHT :

Main fabric : 110 gsm
Fabric 1 : 105 gsm

DESCRIPTION	
Français :	Casquette sport pliable
English :	Foldable sports cap
Nederlands :	Opvouwbare sportpet
Deutsch :	Faltbare Sportkappe
Español :	Gorra plegable de deporte
Italiano :	Cappellino sport pieghevole
Português :	Boné de desporto dobrável

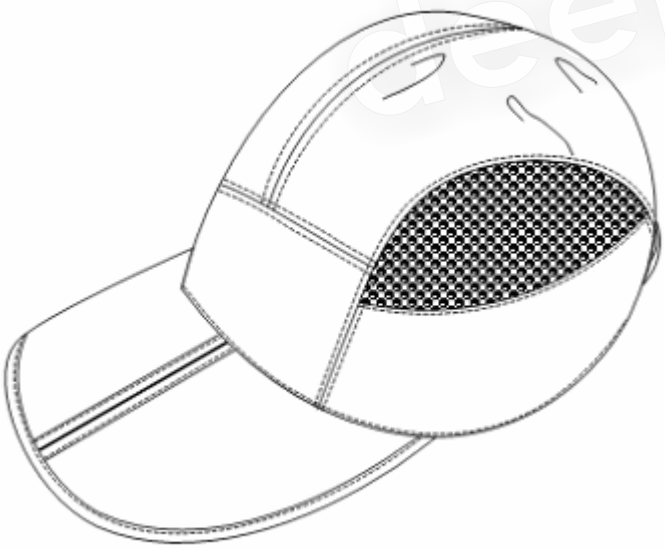

MEASUREMENT							
Description	**U**						
H10 Tour de tête / Head measurement	**58**						

PACKING	
Box	100 pcs / box U => L:54cm W:45cm H:30cm GW:6.90kg NW:5.00kg

CARE LABEL

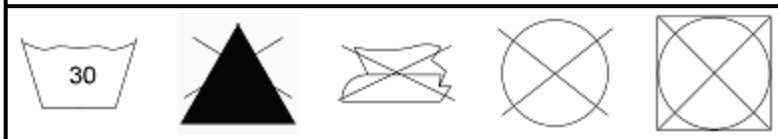

deetex.de

KARIBAN SPORT

REFERENCE : KS303

NAME :

SIZES : S_M_L_XL

COLORS	PANTONE SERIGRAPHIE
Black	Black
Dark grey	447C

COMPOSITION :

Main fabric : Jersey Cool Comfort 250 92%polyester/ 8%elastane
Fabric 1 : Rib 2x2 Polyester/Elastane - 410 95%polyester / 5%elastane

WEIGHT :

Main fabric : 250 gsm
Fabric 1 : 410 gsm

FABRIC CONSTRUCTION AND FINISHING :

Moisture control fabric

DESCRIPTION

Français :	Veste zippée femme "Cool Comfort"
English :	Ladies full zip sweatshirt
Nederlands :	Vestje met rits "Cool Comfort"
Deutsch :	"Cool Comfort" jacke
Español :	Chaqueta con cremallera "Cool Comfort" para mujer
Italiano :	Giacca donna "Cool Comfort"
Português :	Casaco sweatshirt de senhora

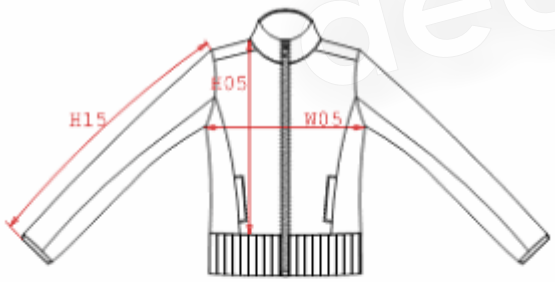

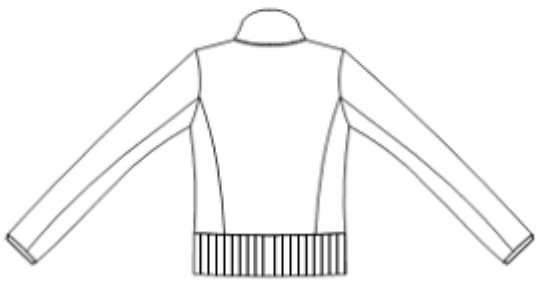

MEASUREMENT

Description	S	M	L	XL			
W05 1/2 largeur poitrine / 1/2 chest width	42,45	44,45	46,45	49,45			
H05 Hauteur totale sans bord-côte / total height without rib	45	46,50	48	50,25			
H15 Longueur manche / Sleeve length	61	62	63	64,75			

PACKING

Box	20 pcs / box S-XL => L:37cm W:33cm H:36cm GW:9.50kg NW:8.50kg

CARE LABEL

deetex.de

KARIBAN SPORT

REFERENCE : KS304

NAME :

SIZES : S_M_L_XL

COLORS	PANTONE SERIGRAPHIE
Black	Black

COMPOSITION :

Main fabric : Cotton / Elastane 250 92%cotton / 8%elastane
Fabric 1 : Rib 2x2 Cotton/Elastane - 330 For sleeve and garment bottom 95%cotton / 5%elastane

WEIGHT :

Main fabric : 250 gsm
Fabric 1 : 330 gsm

DESCRIPTION	
Français :	Sweat-shirt capuche femme
English :	Ladies hooded sweat shirt
Nederlands :	Damessweat met kap
Deutsch :	Damen Sweat-Shirt mit Kapuze
Español :	Sudadera con capucha para mujer
Italiano :	Felpa con cappuccio donna
Português :	Sweatshirt de senhora com capuz

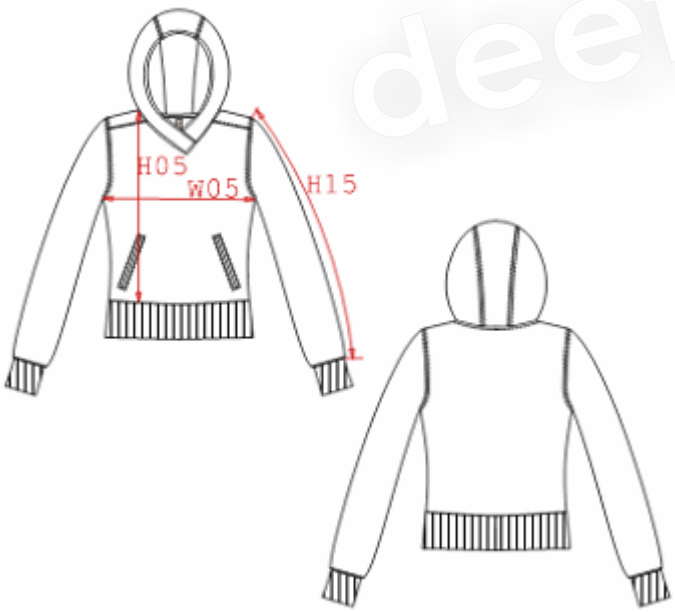

deetex.de

MEASUREMENT							
Description	**S**	**M**	**L**	**XL**			
W05 1/2 largeur poitrine/1/2 chest width	**45,50**	**47,50**	**49,50**	**52,50**			
H05 Hauteur totale/total height	**51,50**	**53**	**54,50**	**56,80**			
H15 longueur manche / Sleeve length	**52,90**	**53,90**	**54,90**	**56,70**			

PACKING	
Box	20 pcs / box S-XL => L:60cm W:48cm H:18cm GW:9.00kg NW:8.00kg

CARE LABEL

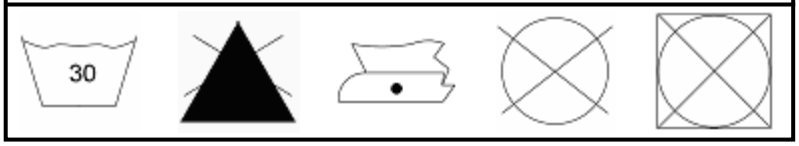

KARIBAN

REFERENCE : KV2100

NAME : VINTAGE RANGE

SIZES : S_M_L_XL_XXL_3XL

COMPOSITION :

Main fabric : Peached cotton jersey 160
100%cotton

COLORS	PANTONE SERIGRAPHIE
Vintage white	663C
Vintage navy	533C
Vintage charcoal	446C
Vintage red	7427C
Vintage blue	647C

WEIGHT :

Main fabric : 160 gsm

FABRIC CONSTRUCTION AND FINISHING

Reactive dyed

DESCRIPTION

Français :	T-shirt homme manches courtes encolure ronde
English :	Men's short sleeve crew neck T-shirt
Nederlands :	Heren T-shirt met ronde hals en korte mouwen
Deutsch :	Herren kurzarm T-shirt mit rundem hals
Español :	Camisata de manga corta y escote redondo
Italiano :	T-shirt uomo maniche corte collo stondato
Português :	T-shirt manga curta decote redondo

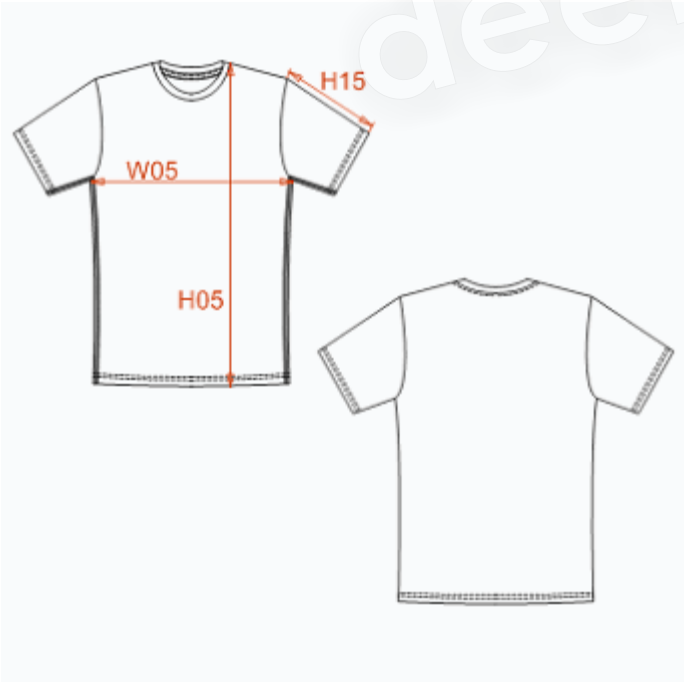

MEASUREMENT

Description	S	M	L	XL	2XL	3XL	
H05 Hauteur totale / Total height	67,50	69,50	71,50	73,50	75,50	78,25	
W05 1/2 largeur poitrine/1/2 chest width	50	53	56	59	62	66	
H15 Longueur manche / Sleeve length	16	17	18	19	20	21,25	

PACKING

Box	50 pcs / box S => L:55cm W:39cm H:23cm GW:8.40kg NW:6.90kg M => L:55cm W:39cm H:23cm GW:8.80kg NW:7.30kg L => L:62cm W:40cm H:23cm GW:10.00kg NW:8.30kg XL => L:62cm W:40cm H:23cm GW:10.10kg NW:8.40kg XXL => L:68cm W:41cm H:23cm GW:11.00kg NW:9.20kg 3XL => L:68cm W:41cm H:23cm GW:11.80kg NW:10.00kg

CARE LABEL

deetex.de

KARIBAN

REFERENCE : KV2101

NAME : VINTAGE RANGE

SIZES : XS_S_M_L_XL_XXL

COMPOSITION :

Main fabric : Peached cotton jersey 160
100%cotton

COLORS	PANTONE SERIGRAPHIE
Vintage charcoal	446C
Vintage red	533C
Vintage navy	7427C

WEIGHT :

Main fabric : 160 gsm

FABRIC CONSTRUCTION AND FINISHING

Reactive dyed

DESCRIPTION

Français :	T-shirt femme manches courtes encolure ronde
English :	Ladies short sleeve crew neck T-shirt
Nederlands :	Dames T-shirt met ronde hals en korte mouwen
Deutsch :	Damen kurzarm T-shirt mit rundem hals
Español :	Camiseta de manga corta y escote redondo para mujer
Italiano :	T-shirt donna maniche corte collo stondato
Português :	T-shirt de senhora manga curta decote redondo

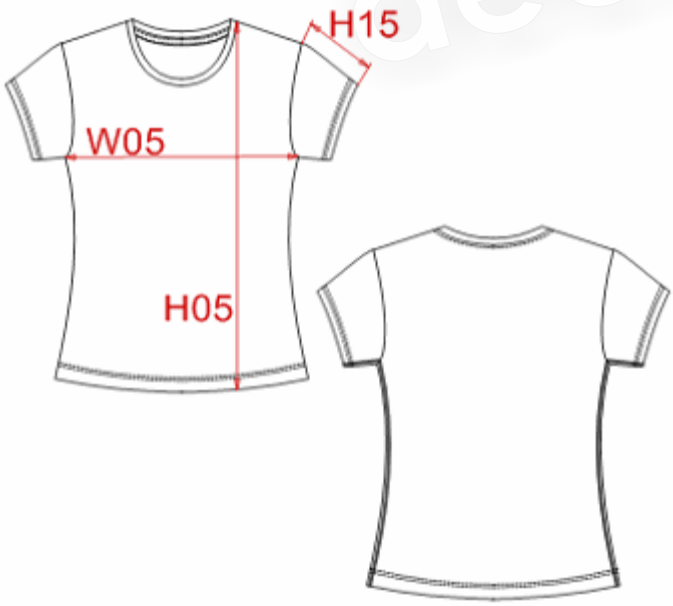

MEASUREMENT

Description	XS	S	M	L	XL	2XL	
H05 Hauteur totale / Total height	61	62,50	64	65,50	67,75	70	
W05 1/2 largeur poitrine / 1/2 chest width	41	43	45	47	50	53	
H15 Longueur manche / Sleeve length	13,50	14	14,50	15	15,75	16,50	

PACKING

Box	50 pcs / box XS => L:45cm W:36cm H:23cm GW:6.60kg NW:5.20kg S => L:45cm W:36cm H:23cm GW:6.90kg NW:5.50kg M => L:50cm W:36cm H:23cm GW:7.36kg NW:5.96kg L => L:50cm W:36cm H:23cm GW:7.70kg NW:6.30kg XL => L:55cm W:38cm H:23cm GW:8.40kg NW:6.85kg XXL => L:55cm W:38cm H:23cm GW:8.90kg NW:7.35kg

CARE LABEL

deeflex.de

KARIBAN

REFERENCE : KV2102

NAME : VINTAGE RANGE

SIZES : XS_S_M_L_XL_XXL

COLORS	PANTONE SERIGRAPHIE
White	White
Fuschia	7636C

COMPOSITION :

Main fabric : Peached cotton jersey 190 100%cotton
Fabric 2 : Rib 2x2 Cotton - 200 For side yokes, cuff and bottom garment 100%cotton

WEIGHT :

Main fabric : 190 gsm
Fabric 2 : 200 gsm

FABRIC CONSTRUCTION AND FINISHING :

Gaugge 24gg Reactive dyed

DESCRIPTION

Français :	T-shirt fantaisie femme manches longues à capuche
English :	Ladies long sleeve trendy hooded T-shirt
Nederlands :	Trendy dames T-shirt met lange mouwen en capuchon
Deutsch :	Damen langarmtrendy T-shirt mit kapuze
Español :	Camiseta vintage de manga larga y capucha para mujer
Italiano :	T-shirt donna manica lunga con cappuccio
Português :	T-shirt de senhora manga comprida com capuz

MEASUREMENT

Description	XS	S	M	L	XL	XXL	
H05 Hauteur totale avec BC / Total height with rib	69,50	71	72,50	74	76,25	78,50	
W05 1/2 largeur poitrine / 1/2 chest width	40	42	44	46	49	52	
H15 Longueur manche avec poignet / Sleeve length with cuff	62	64	66	68	70,25	72,50	

PACKING

Box	20 pcs / box XS => L:52cm W:40cm H:22cm GW:7.73kg NW:6.19kg S => L:52cm W:40cm H:22cm GW:8.00kg NW:6.46kg M => L:52cm W:40cm H:22cm GW:8.20kg NW:6.66kg L => L:52cm W:40cm H:22cm GW:8.57kg NW:7.03kg XL => L:52cm W:40cm H:24cm GW:9.11kg NW:7.57kg XXL => L:52cm W:40cm H:24cm GW:9.45kg NW:7.91kg

CARE LABEL

deeflex.de

KARIBAN

REFERENCE : KV2200

NAME : VINTAGE RANGE

SIZES : S_M_L_XL_XXL_3XL

COMPOSITION :

Main fabric : Cotton Pique 220 100%cotton

COLORS	PANTONE SERIGRAPHIE
Vintage white	663C
Vintage navy	533C
Vintage charcoal	446C
Vintage red	7427C
Vintage blue	647C

WEIGHT :

Main fabric : 220 gsm

FABRIC CONSTRUCTION AND FINISHING

Gaugge 24gg Vintage wash - Reactive dyed

DESCRIPTION

Français :	Polo homme manches courtes
English :	Men's short sleeve pique polo shirt
Nederlands :	Heren polo met korte mouwen
Deutsch :	Herren kurzarm pique polo
Español :	Polo de manga corta
Italiano :	Polo pique uomo a maniche corte
Português :	Polo pique manga curta

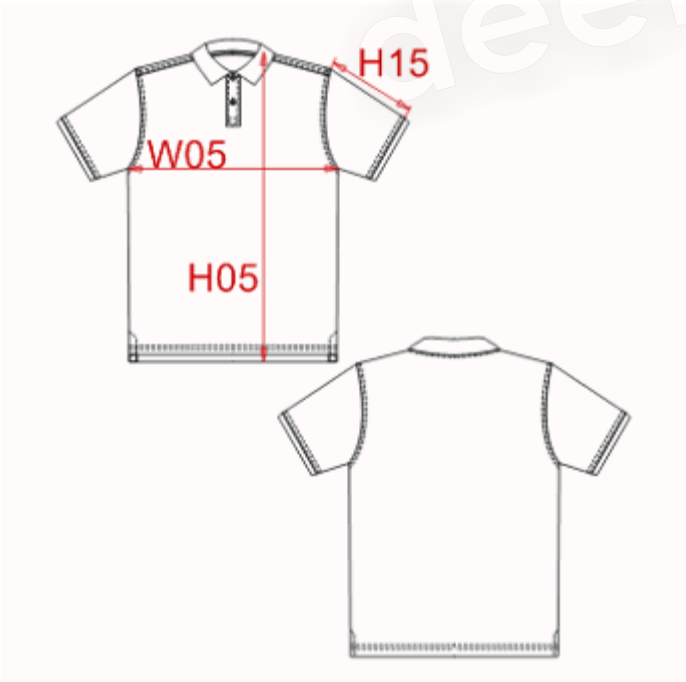

MEASUREMENT

Description	S	M	L	XL	2XL	3XL	
W05 1/2 largeur poitrine / 1/2 chest width	50	53	56	59	62	66	
H15 Longueur manche / Sleeve length	17	18	19	20	21	22,50	
H05 Hauteur totale / Total height	72,25	74,25	76,25	78,25	80,25	83	

PACKING

Box	50 pcs / box S => L:60cm W:44cm H:33cm GW:11.50kg NW:9.50kg M => L:60cm W:44cm H:33cm GW:12.35kg NW:10.35kg L => L:60cm W:44cm H:37cm GW:14.15kg NW:12.10kg XL => L:60cm W:44cm H:37cm GW:15.90kg NW:13.90kg XXL => L:60cm W:44cm H:40cm GW:17.25kg NW:15.20kg 3XL => L:60cm W:44cm H:40cm GW:18.65kg NW:16.55kg

CARE LABEL

deetex.de

KARIBAN

REFERENCE : KV2201

NAME : VINTAGE RANGE

SIZES : XS_S_M_L_XL_XXL

COMPOSITION :

Main fabric : Cotton Pique 220 100%cotton

COLORS	PANTONE SERIGRAPHIE
Vintage charcoal	446C
Vintage red	7427C
Vintage navy	533C

WEIGHT :

Main fabric : 220 gsm

FABRIC CONSTRUCTION AND FINISHING

Gaugge 24gg Vintage wash - Reactive dyed

DESCRIPTION

Français :	Polo femme manches courtes
English :	Ladies short sleeve pique polo shirt
Nederlands :	Dames polo met korte mouwen
Deutsch :	Damen kurzarm pique polo
Español :	Polo de manga corta para mujer
Italiano :	Polo pique' donna maniche corte
Português :	Polo de senhora em malha pique manga curta

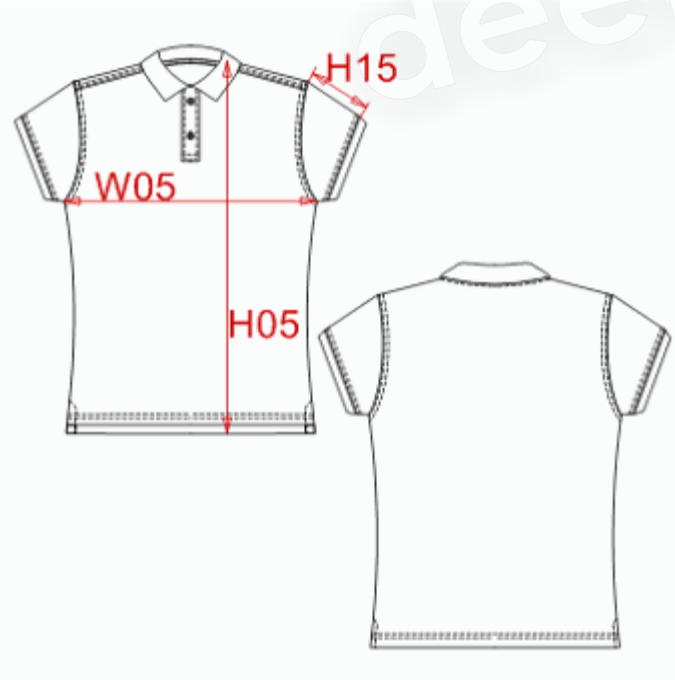

MEASUREMENT

Description	XS	S	M	L	XL	2XL	
H05 Hauteur totale / Total height	62	63,50	65	66,50	68,75	71	
W05 1/2 largeur poitrine / 1/2 chest width	43	45	47	49	52	55	
H15 Longueur manche / Sleeve length	10	10,50	11	11,50	12,25	13	

PACKING

Box	50 pcs / box XS => L:59cm W:38cm H:29cm GW:9.10kg NW:7.30kg S => L:59cm W:38cm H:29cm GW:10.10kg NW:8.30kg M => L:59cm W:38cm H:33cm GW:11.60kg NW:9.70kg L => L:59cm W:38cm H:33cm GW:13.40kg NW:11.40kg XL => L:59cm W:38cm H:36cm GW:14.60kg NW:12.60kg XXL => L:59cm W:38cm H:36cm GW:15.90kg NW:13.90kg

CARE LABEL

deeflex.de

KARIBAN

REFERENCE : KV2202

NAME : VINTAGE RANGE

SIZES : S_M_L_XL_XXL_3XL

COMPOSITION :

Main fabric : Peached cotton jersey 190 100%cotton
Fabric 2 : Cotton twill 200 For outer and inner collar band and under placket 100%cotton

COLORS	PANTONE SERIGRAPHIE
Vintage charcoal	446C
Vintage navy	533C
Vintage red	7427C
Vintage blue	647C

WEIGHT :

Main fabric : 190 gsm
Fabric 2 : 200 gsm

FABRIC CONSTRUCTION AND FINISHING :

Gaugge 24gg Reactive dyed

DESCRIPTION

Français :	Polo rugby manches longues
English :	Men's long sleeve rugby polo shirt
Nederlands :	Rugbypolo met lange mouwen
Deutsch :	Herren langarm rugby-polo
Español :	Polo rugby de manga larga
Italiano :	Polo rugby uomo maniche lunghe
Português :	Polo rugby manga comprida

MEASUREMENT

Description	S	M	L	XL	2XL	3XL	
H05 Hauteur totale / Total height	71,50	73,50	75,50	77,50	79,50	82,25	
W05 1/2 largeur poitrine / 1/2 chest width	48	51	54	57	60	64	
H15 Longueur manche sans poignet / Sleeve length without cuff	59,50	61	62,50	64	65,50	67	

PACKING

Box	20 pcs / box S => L:60cm W:40cm H:20cm GW:7.45kg NW:5.95kg M => L:60cm W:40cm H:20cm GW:7.71kg NW:6.21kg L => L:60cm W:40cm H:20cm GW:7.94kg NW:6.44kg XL => L:60cm W:40cm H:22cm GW:8.55kg NW:7.05kg XXL => L:60cm W:40cm H:22cm GW:8.87kg NW:7.37kg 3XL => L:60cm W:40cm H:22cm GW:9.36kg NW:7.86kg

CARE LABEL

deetex.de

KARIBAN

REFERENCE : KV2300

NAME : VINTAGE RANGE

SIZES : S_M_L_XL_XXL_3XL

COMPOSITION :

Main fabric : Cotton / Polyester fleece 290 30's/30's/16's on 20gg
Peached and brushed inside
Fabric 2 : Cotton / Viscose Waffle 200 For inner hood lining 85%cotton/15%viscose

WEIGHT :

Main fabric : 280 - 290 gsm
Fabric 2 : 200 - 210 gsm

FABRIC CONSTRUCTION AND FINISHING :

Gaugge 20gg Reactive dyed

COLORS	PANTONE SERIGRAPHIE
Vintage charcoal	446C
Vintage navy	533C
Vintage red	7427C
Vintage blue	647C

DESCRIPTION

Français :	Sweat-shirt zippé homme à capuche
English :	Men's zip hooded sweatshirt
Nederlands :	Heren sweater met capuchon en rits
Deutsch :	Herren full zip hooded sweat
Español :	Sudadera con capucha y cremallera
Italiano :	Felpa uomo cappuccio con zip
Português :	Casaco sweatshirt com capuz

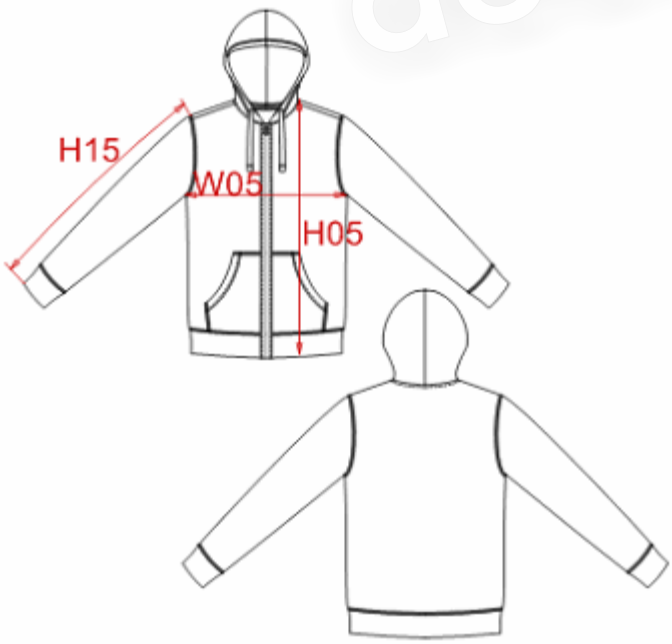

MEASUREMENT

Description	S	M	L	XL	2XL	3XL	
H05 Hauteur totale avec BC / Total height with rib	71	73	75	77	79	81,75	
W05 1/2 largeur poitrine / 1/2 chest width	51,50	54,50	57,50	60,50	63,50	67,50	
H15 Longueur manche avec BC / Sleeve length with rib	65,50	67,50	69,50	71,50	73,50	75,50	

PACKING

Box	20 pcs / box S => L:52cm W:40cm H:45cm GW:13.90kg NW:11.90kg M => L:52cm W:40cm H:48cm GW:14.50kg NW:12.50kg L => L:52cm W:40cm H:48cm GW:15.40kg NW:13.40kg XL => L:65cm W:40cm H:50cm GW:16.70kg NW:14.10kg XXL => L:65cm W:40cm H:50cm GW:17.60kg NW:15.00kg 3XL => L:65cm W:40cm H:50cm GW:18.40kg NW:15.80kg

CARE LABEL

deetex.de

KARIBAN

REFERENCE : KV2301

NAME : VINTAGE RANGE

SIZES : XS_S_M_L_XL_XXL

COMPOSITION :

Main fabric : Cotton / Polyester fleece 290 80%cotton / 20%polyester
Fabric 2 : Cotton / Viscose Waffle 200 For inner hood lining 85%cotton/15%viscose

WEIGHT :

Main fabric : 280 - 290 gsm
Fabric 2 : 200 - 210 gsm

FABRIC CONSTRUCTION AND FINISHING :

Gaugge 20gg Reactive dyed

COLORS	PANTONE SERIGRAPHIE
Vintage charcoal	446C
Vintage navy	533C
Vintage red	7427C

DESCRIPTION

Français :	Sweat-shirt zippé femme à capuche
English :	Ladies zip hooded sweatshirt
Nederlands :	Dames sweater met capuchon en rits
Deutsch :	Damen full zip hooded sweat
Español :	Sudadera con capucha y cremallera para mujer
Italiano :	Felpa donna cappuccio con zip
Português :	Casaco sweatshirt de senhora com capuz

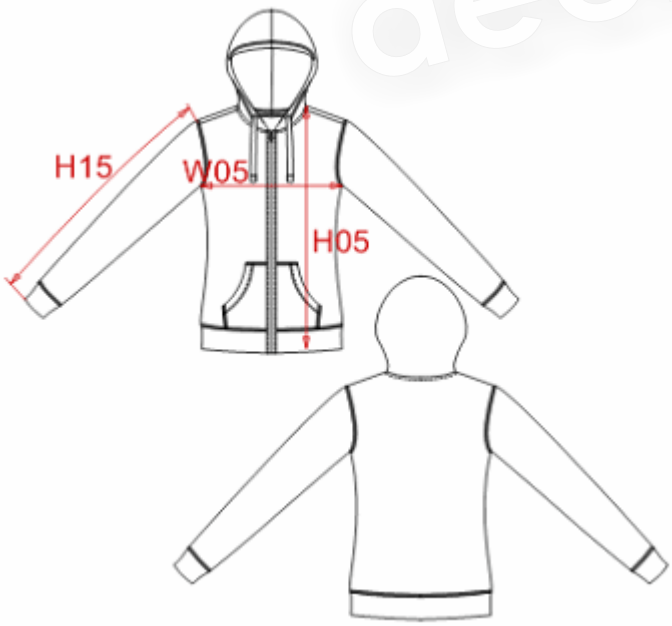

MEASUREMENT

Description	XS	S	M	L	XL	2XL	
H05 Hauteur totale avec BC / Total height with rib	59,50	61	62,50	64	66,25	68,50	
W05 1/2 largeur poitrine / 1/2 chest width	42,50	44,50	46,50	48,50	51,50	54,50	
H15 Longueur manche avec BC / Sleeve length with rib	61	62	63	64	65,25	66,50	

PACKING

Box	20 pcs / box XS => L:60cm W:43cm H:32cm GW:11.10kg NW:9.50kg S => L:60cm W:43cm H:32cm GW:11.60kg NW:10.00kg M => L:62cm W:45cm H:35cm GW:12.00kg NW:10.40kg L => L:62cm W:45cm H:35cm GW:12.50kg NW:10.90kg XL => L:65cm W:46cm H:35cm GW:13.50kg NW:11.70kg XXL => L:66cm W:49cm H:35cm GW:13.90kg NW:12.10kg

CARE LABEL

deetex.de

KARIBAN

REFERENCE : KV2302

NAME : VINTAGE RANGE

SIZES : S_M_L_XL_XXL_3XL

COMPOSITION :

Main fabric : Cotton / Polyester fleece 290 80%cotton / 20%polyester
Fabric 2 : Cotton / Viscose Waffle 200 For inner hood lining 85%cotton/15%viscose

WEIGHT :

Main fabric : 280 - 290 gsm
Fabric 2 : 200 - 210 gsm

FABRIC CONSTRUCTION AND FINISHING :

Gaugge 20gg Reactive dyed

COLORS	PANTONE SERIGRAPHIE
Vintage charcoal	446C
Vintage navy	533C
Vintage red	7427C
Vintage blue	647C

DESCRIPTION

Français :	Sweat-shirt col zippé homme
English :	Men's zip neck sweatshirt
Nederlands :	Heren sweater met ritskraag
Deutsch :	Herren zip neck sweatshirt
Español :	Sudadera cuello con cremallera
Italiano :	Felpa uomo collo zip
Português :	Sweatshirt com meio fecho

deetex.de

MEASUREMENT

Description	S	M	L	XL	2XL	3XL	
H05 Hauteur totale avec BC / Total height with rib	71	73	75	77	79	81,75	
W05 1/2 largeur poitrine / 1/2 chest width	51,50	54,50	57,50	60,50	63,50	67,50	
H15 Longueur manche avec BC / Sleeve length with rib	65,50	67,50	69,50	71,50	73,50	75,50	

PACKING

Box	20 pcs / box S => L:53cm W:38cm H:36cm GW:12.00kg NW:10.00kg M => L:53cm W:38cm H:36cm GW:12.50kg NW:10.50kg L => L:60cm W:40cm H:36cm GW:13.00kg NW:10.90kg XL => L:60cm W:40cm H:36cm GW:13.40kg NW:11.20kg XXL => L:65cm W:42cm H:36cm GW:13.90kg NW:11.60kg 3XL => L:65cm W:42cm H:36cm GW:14.40kg NW:12.00kg

CARE LABEL

REFERENCE : PA015

NAME :

SIZES : 27/30_31/34_35/38_39/42_43/46

COMPOSITION :

Main fabric : Socks fabric 60%polyamide / 39%acrylic / 1%spandex

WEIGHT :

Main fabric :

COLORS	PANTONE SERIGRAPHIE
Black / Red	Black / 186C
Black / Yellow	Black / 109C
Green / White	362C / White
Royal blue / White	293C / White
Black / White	Black / White
Red / White	186C / White
White / Black	White / Black
White / Royal blue	White / 293C
Red / Yellow	186C / 109C
Sky blue / White	2915C / White

DESCRIPTION

Français :	Chaussettes de sport à rayures
English :	Striped sports socks
Nederlands :	Sportkousen met strepen
Deutsch :	Gestreifte sportsocken
Español :	Calcetines de deporte a rayas
Italiano :	Calzini da sport a righe
Português :	Meias de desporto as riscas

deetex.de

MEASUREMENT

Description	27/30	31/34	35/38	39/42	43/46		

PACKING

Box	30 pcs / box 27/30 => L:56cm W:24.5cm H:20cm GW:2.90kg NW:1.90kg 31/34 => L:56cm W:24.5cm H:20cm GW:3.32kg NW:2.32kg 35/38 => L:58cm W:28cm H:20cm GW:3.74kg NW:2.74kg 39/42 => L:58cm W:28cm H:20cm GW:4.16kg NW:3.16kg 43/46 => L:60cm W:31.5cm H:20cm GW:4.58kg NW:3.58kg

CARE LABEL

REFERENCE : PA016

NAME :

SIZES : 27/30_31/34_35/38_39/42_43/46

COMPOSITION :

Main fabric : Socks fabric 60%polyamide / 39%acrylic / 1%spandex

WEIGHT :

Main fabric :

COLORS	PANTONE SERIGRAPHIE
Red	186C
Royal blue	293C
Black	Black
White	White
Green	3405C
Yellow	109C

DESCRIPTION

Français :	Chaussettes de sport unies
English :	Striped sports socks
Nederlands :	Sportkousen
Deutsch :	Einfärbig sportsocken
Español :	Calcetines de deporte
Italiano :	Calzini da sport
Português :	Meias de desporto lisas

MEASUREMENT

Description	27/30	31/34	35/38	39/42	43/46		

PACKING

Box	30 pcs / box 27/30 => L:56cm W:24.5cm H:20cm GW:2.90kg NW:1.90kg 31/34 => L:56cm W:24.5cm H:20cm GW:3.32kg NW:2.32kg 35/38 => L:58cm W:28cm H:20cm GW:3.74kg NW:2.74kg 39/42 => L:58cm W:28cm H:20cm GW:4.16kg NW:3.16kg 43/46 => L:60cm W:31.5cm H:20cm GW:4.58kg NW:3.58kg

CARE LABEL

REFERENCE : PA100

NAME : UPA

SIZES : XS_S_M_L_XL_XXL_3XL

COMPOSITION :
Main fabric : Polytricot 220 100%polyester

COLORS	PANTONE SERIGRAPHIE
Black	Black
Navy	289C

WEIGHT :
Main fabric : 220 gsm

DESCRIPTION	
Français :	Pantalon de survêtement
English :	Training pants
Nederlands :	Trainingsbroek
Deutsch :	Sporthose
Español :	Pantalón de chándal
Italiano :	Pantaloni da sport
Português :	Calças de desporto

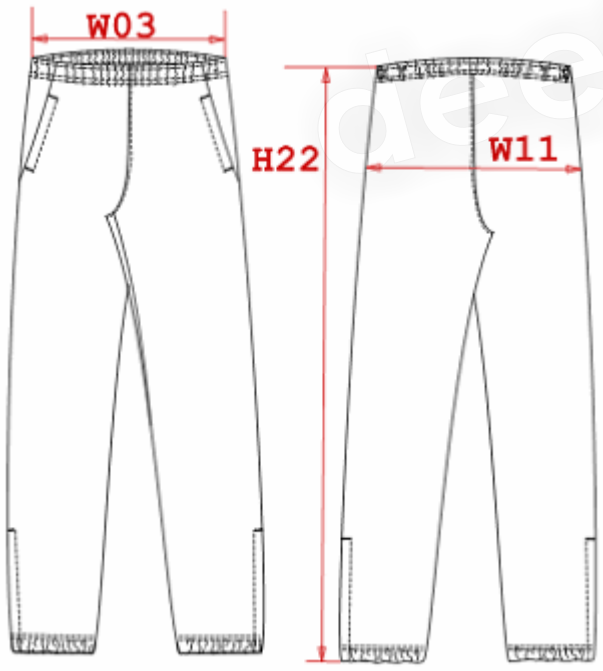

MEASUREMENT

Description	XS	S	M	L	XL	XXL	3XL
W03 1/2 largeur taille élastiquée / 1/2 elasticated waist width	32	34	36	38	41	45	49
W11 1/2 bassin / 1/2 hip width	48,30	51,30	54,30	57,30	60,30	64,30	68,30
H22 Longueur côté avec ceinture / Side length with waistband	102,70	105,45	108,25	111	113,80	116,85	119,90

PACKING

Box	20 pcs / box XS-S => L:35cm W:28cm H:38cm GW:10kg NW:8kg M-L => L:37cm W:30cm H:38cm GW:11kg NW:9kg XL-XXL=> L:39cm W:32cm H:38cm GW:12kg NW:10kg 3XL=> L:40cm W:34cm H:38cm GW:13kg NW:11kg

CARE LABEL

REFERENCE : PA101

NAME : ASSUA

SIZES : XS_S_M_L_XL_XXL_3XL

COMPOSITION :

Main fabric : Polyester jersey 140 100%polyester

WEIGHT :

Main fabric : 140 gsm

COLORS	PANTONE SERIGRAPHIE
Red	186C
Royal blue	2935C
Yellow	109C
Green	362C
White	White
Black	Black
Navy	2965C
Sky blue	277C

DESCRIPTION

Français :	Short de sport
English :	Sports shorts
Nederlands :	Sportshort
Deutsch :	Sport Short
Español :	Short de deporte
Italiano :	Pantaloncino da sport
Português :	Calçao de desporto

MEASUREMENT

Description	XS	S	M	L	XL	XXL	3XL
W17 1/2 longueur taille élastiquée / Elasticated waist 1/2 length	32	34	36	38	41	45	49
W11 1/2 bassin / 1/2 hip width	45,95	49	52,05	55,05	58,10	62,15	66,20
H22 Longueur côté ceinture comprise / Side length included waist	46,25	47,60	49	50,35	51,70	53,30	54,90

PACKING

Box	25 pcs / box XS-3XL => L:40cm W:35cm H:20cm GW:4kg NW:3kg

CARE LABEL

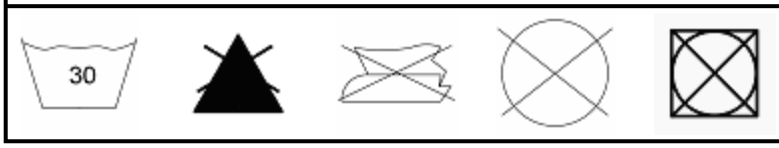

deeflex.de

REFERENCE : PA102

NAME : UPJ

SIZES : 6/8_8/10_10/12_12/14

COMPOSITION :
Main fabric : Polytricot 220 100%polyester

COLORS	PANTONE SERIGRAPHIE
Black	Black
Navy	289C

WEIGHT :
Main fabric : 220 gsm

DESCRIPTION

Français :	Pantalon de survêtement enfant
English :	Kids training pants
Nederlands :	Trainingsbroek kids
Deutsch :	Sporthose für Kinder
Español :	Pantalón de chándal para niños
Italiano :	Pantaloni da sport bambino
Português :	Calças de desporto de criança

MEASUREMENT

Description	6/8	8/10	10/12	12/14			
W03 1/2 largeur taille élastiquée / 1/2 elasticated waist width	28	30	31	32			
W11 1/2 bassin / 1/2 hip width	39,25	41,25	43,25	45,25			
H22 Longueur côté avec ceinture / Side length with waistband	80,75	87,75	94,75	101,75			

PACKING

Box	20 pcs / box 6/8 => L:31cm W:23cm H:36cm GW:7.5kg NW:5.5kg 8/10 => L:31cm W:23cm H:36cm GW:8kg NW:6kg 10/12 => L:34cm W:26cm H:36cm GW:9kg NW:7kg 12/14 => L:34cm W:26cm H:36cm GW:9.5kg NW:7.5kg

CARE LABEL

deetex.de

REFERENCE : PA103

NAME : ASSUJ

SIZES : 6/8_8/10_10/12_12/14

COMPOSITION :

Main fabric : Polyester jersey 140 100%polyester

WEIGHT :

Main fabric : 140 gsm

COLORS	PANTONE SERIGRAPHIE
Red	186C
Royal blue	2935C
Yellow	109C
Green	362C
White	White
Black	Black
Sky blue	277C
Navy	2965C

DESCRIPTION

Français :	Short de sport enfant
English :	Kids sports shorts
Nederlands :	Sportshort kids
Deutsch :	Sport short für Kinder
Español :	Short de deporte para niños
Italiano :	Pantaloncino da sport bambino
Português :	Calção de desporto de criança

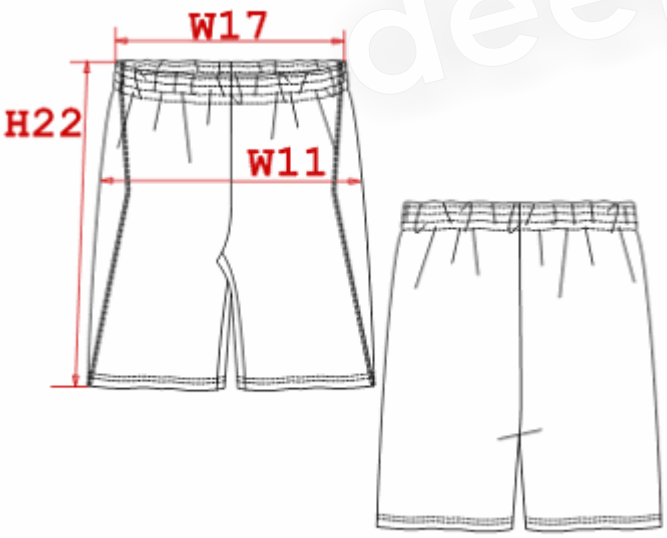

MEASUREMENT

Description	6/8	8/10	10/12	12/14			
W17 1/2 longueur taille élastiquée / Elasticated waist 1/2 length	28	29	30	31			
W11 1/2 bassin / 1/2 hip width	37,80	39,80	41,85	43,90			
H22 Longueur côté ceinture comprise / Side length included waist	32,80	36,75	40,65	44,60			

PACKING

Box	25 pcs / box 6/8-12/14 => L:40cm W:30cm H:20cm GW:4kg NW:3kg

CARE LABEL

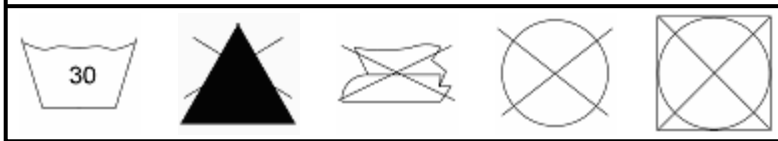

REFERENCE : PA104

NAME : TLS

SIZES : S_M_L_XL_XXL_3XL

COMPOSITION :

Main fabric : Polyester jersey 200 100%polyester
Mesh : Mesh 130 For inside leg gore and pocket sack 100%polyester

WEIGHT :

Main fabric : 200 gsm
Mesh : 130 gsm

FABRIC CONSTRUCTION AND FINISHING :

Brushed

COLORS	PANTONE SERIGRAPHIE
Black / Silver	Black / 430C
Navy / Silver	281C / 430C

DESCRIPTION

Français :	Bermuda d'entraînement
English :	Training bermuda shorts
Nederlands :	Trainings bermuda
Deutsch :	Training Bermuda
Español :	Bermuda de entrenamiento
Italiano :	Bermuda da allenamento
Português :	Bermuda de desporto

MEASUREMENT

Description	S	M	L	XL	XXL	3XL	
W18 1/2 taille élastiquée / 1/2 elasticated waist	35	36,50	38	39,50	41,50	43,50	
W11 1/2 bassin / 1/2 hip width	50,65	53,60	56,55	59,50	63,35	67,20	
H22 Longueur côté ceinture comprise / Side length waist included	60	61,50	63	64,50	66,25	68	
H23 Longueur entrejambe / Inside leg length	33,95	34,70	35,45	36,20	36,95	37,70	

PACKING

Box	20 pcs / box S-3XL=> L:49cm W:41cm H:20cm GW:4.00kg NW:3.00kg

CARE LABEL

deetex.de

REFERENCE : PA105

NAME :

SIZES : XS_S_M_L_XL_XXL_3XL

COLORS	PANTONE SERIGRAPHIE
Sky blue / White	277C / White
Navy / Deep pink	296C / 204C

COMPOSITION :

Main fabric : Polyester knit 125 For body, under sleeve and short and inner binding collar 100%polyester
Mesh : Mesh 125 For sleeve yokes 100%polyester

WEIGHT :

Main fabric : 125 gsm
Mesh : 125 gsm

DESCRIPTION

Français :	Ensemble de sport bicolore
English :	Bi-colour sports & T-shirt set
Nederlands :	Tweekleurig sportset
Deutsch :	Zweifarbiges Sport Set
Español :	Conjunto deporte bicolor : camiseta/short
Italiano :	Tenuta da sport bicolore
Português :	Conjunto de desporto bicolor

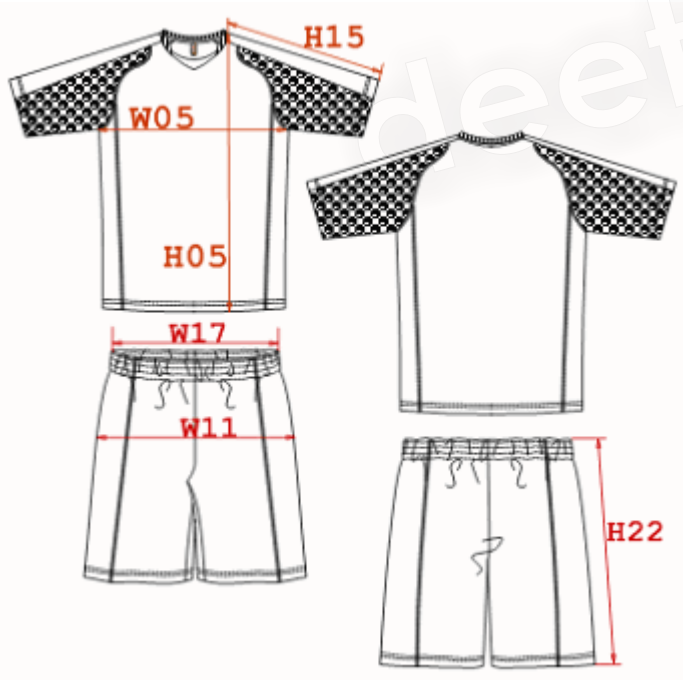

MEASUREMENT

Description	XS	S	M	L	XL	XXL	3XL
TEE SHIRT							
H05 Hauteur totale / Total height	71	73,10	75,20	77,30	79,40	82,30	85,20
W05 1/2 largeur poitrine / 1/2 chest width	47	50	53	56	59	63	67
H15 Longueur manche / Sleeve length	38,50	40,35	42,20	44,10	45,95	48,35	50,75
SHORT							
W17 1/2 largeur taille élastiquée / 1/2 elasticated waist width	31	33	35	38	41	45	49
W11 1/2 bassin / 1/2 hip width	46	49	52	55	58	62	66
H22 Longueur côté ceinture comprise / Side length included waist	47,20	48,70	50,20	51,65	53,15	54,85	56,60

PACKING

Box	20 sets / box XS-3XL => L:43cm W:38cm H:23cm GW:7kg NW:6kg

CARE LABEL

REFERENCE : PA201

NAME : DCO

SIZES : S_M_L_XL_XXL_3XL

COLORS	PANTONE SERIGRAPHIE
Black / Grey	Black / 430C

COMPOSITION :

Main fabric : Nylon AC coating 80 100%polyamide
Lining 1 : Lining polyester 70 For inner body and inner hood 100%polyester
Fabric 1 : Polar fleece 210 For inner collar, pocket sack and cuff 100%polyester
Wad 1 : Polyfil 190 For inner body, sleeve, outer and under front tab, pocket piping, collar and hood 100%polyester

WEIGHT :

Main fabric : 80 gsm
Lining 1 : 70 gsm
Fabric 1 : 210gsm
Wad 1 : 190 gsm

DESCRIPTION

Français :	Veste coach avec doublure contrastée matelassée
English :	Coach jacket with contrast padded lining
Nederlands :	Gewatteerde "trainers" jas met voering in contrasterende kleur
Deutsch :	Coach Jacke mit Kontrast Steppfutter
Español :	Chaqueta Coach con forro contrasdo acolchado
Italiano :	Giacca coach con fodera in trapunta in contrasto
Português :	Blusão de treinador

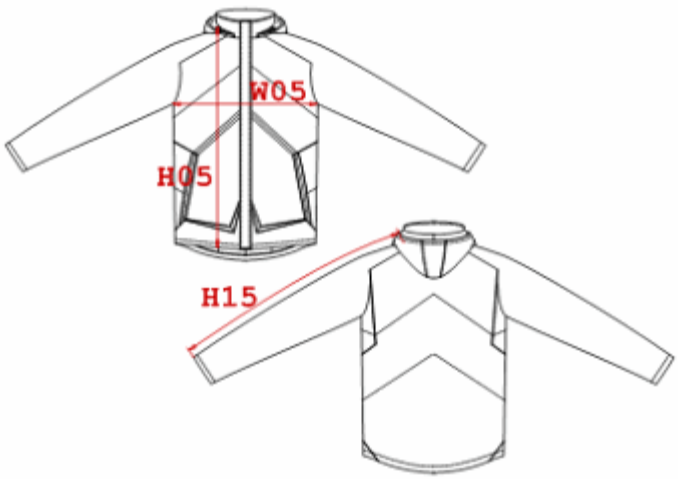

MEASUREMENT

Description	S	M	L	XL	XXL	3XL	
H05 Hauteur totale devant / Front total height	91,30	93,40	95,50	97,60	100,50	103,40	
W05 1/2 largeur poitrine / 1/2 chest width	61,90	64,90	67,90	70,90	74,90	78,90	
H15 Longueur manche / Sleeve length	82,10	85	87,85	90,70	94,15	97,60	

PACKING

Box	10 pcs / box S-M => L:64cm W:46cm H:50cm GW:11.00kg NW:9.50kg L-XL => L:69cm W:48cm H:50cm GW:11.00kg NW:9.50kg XXL-3XL => L:74cm W:50cm H:50cm GW:11.00kg NW:9.50kg

CARE LABEL

deelex.de

REFERENCE : PA202

NAME : DCVA

SIZES : XS_S_M_L_XL_XXL_3XL

COMPOSITION :

Main fabric : Nylon 210T AC coating 70 100%polyamide
Main fabric : Nylon 210T AC coating 70 For contrasted yokes 100%polyamide
Mesh : Mesh 70 For back middle lining 100%polyester

WEIGHT :

Main fabric : 70 gsm
Main fabric : 70 gsm
Mesh : 70 gsm

COLORS	PANTONE SERIGRAPHIE
Navy / Grey	2965C / 430C
Black / Grey	Black / 430C
Red / White	186C / White

DESCRIPTION

Français :	Coupe-vent sport bicolore adulte
English :	Sports bi-colour windbreaker
Nederlands :	Tweekleurige windbreaker
Deutsch :	Zweifarbige sportwindjacke
Español :	Cortaviento bicolor de deporte
Italiano :	Giacca a vento sport bicolore
Português :	Windbreaker de desporto bicolor

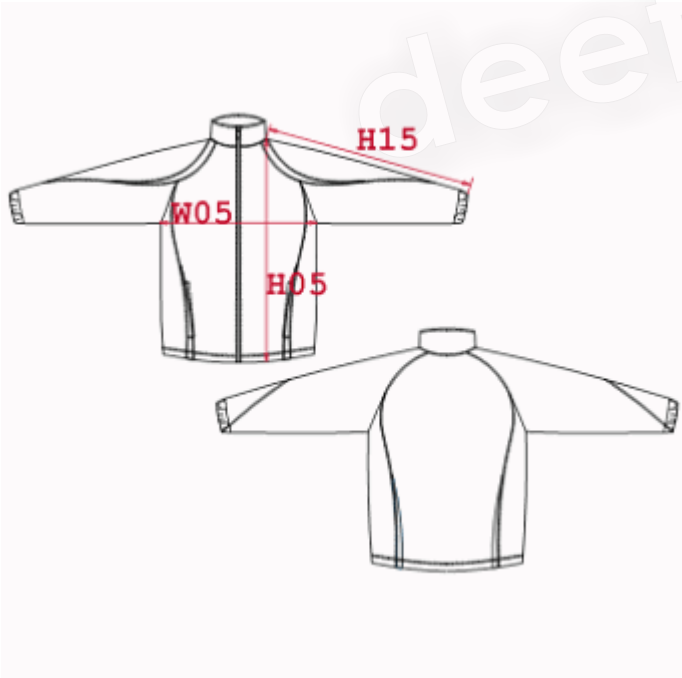

MEASUREMENT

Description	XS	S	M	L	XL	XXL	3XL
H05 Hauteur totale / Total height	70,70	72,85	74,95	77,10	79,20	82,10	85
W05 1/2 largeur poitrine / 1/2 chest width	55	58	61	64	67	71	75
H15 Longueur manche / Sleeve length	78,55	81,45	84,30	87,20	90	93,55	96,95

PACKING

Box	25 pcs / box XS-S => L:58cm W:38cm H:14cm GW:8.00kg NW:7.00kg M-L => L:64cm W:40cm H:14cm GW:8.00kg NW:7.00kg XL-XXL => L:70cm W:42cm H:14cm GW:8.00kg NW:7.00kg 3XL => L:76cm W:43cm H:14cm GW:8.00kg NW:7.00kg

CARE LABEL

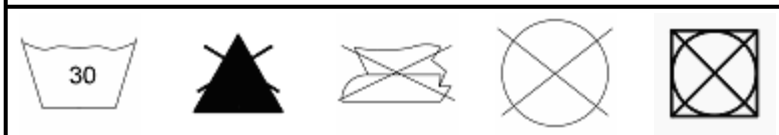

REFERENCE : PA203

NAME : UBMA

SIZES : XS_S_M_L_XL_XXL_3XL

COMPOSITION :

Main fabric : Nylon taslon 130 100%polyamide
Main fabric : Nylon taslon 130 For contrasted yokes 100%polyamide
Fabric 2 : Micropolar fleece 200 For body lining 100%polyester
Lining 2 : Lining 210T For sleeve, hood and pocket 100%polyester
Wad 2 : Polyfil 65 For sleeves 100%polyester

WEIGHT :

Main fabric : 130 gsm
Main fabric : 130 gsm
Fabric 2 : 200 gsm
Lining 2 : 60 gsm
Wad 2 : 65 gsm

FABRIC CONSTRUCTION AND FINISHING :

With AC coating

COLORS	PANTONE SERIGRAPHIE
Black / Grey	Black / 430C
Red / White	186C / White
Navy / Grey	2965C / 430C

DESCRIPTION

Français :	Blouson sport adulte manches amovibles
English :	Sports blouson jacket with detachable sleeves
Nederlands :	Sportjas met afneembare mouwen
Deutsch :	Sportblouson mit abnehmbaren ärmeln
Español :	Chaqueta deportiva con mangas desmontables
Italiano :	Giubbotto sport con maniche staccabili
Português :	Blusão de treinador

MEASUREMENT

Description	XS	S	M	L	XL	XXL	3XL
H05 Hauteur totale / Total height	73,80	75,80	77,80	79,85	81,85	84,65	87,40
W05 1/2 largeur poitrine / 1/2 chest width	55	58	61	64	67	71	75
H15 Longueur manche / Sleeve length	69,10	70,70	72,25	73,85	75,45	77,70	80

PACKING

Box	10 pcs / box XS-S => L:58cm W:38cm H:18cm GW:7.70kg NW:7.00kg M-L => L:60cm W:40cm H:18cm GW:8.40kg NW:7.70kg XL-3XL => L:71cm W:43cm H:18cm GW:9.60kg NW:8.40kg

CARE LABEL

REFERENCE : PA204

NAME : DCVE

SIZES : 6/8_8/10_10/12_12/14

COMPOSITION :

Main fabric : Nylon 210T AC coating 70 100% polyamide
Main fabric : Nylon 210T AC coating 70 For contrasted yokes 100% polyamide
Mesh : Mesh 70 For back middle lining 100%polyester

WEIGHT :

Main fabric : 70 gsm
Main fabric : 70 gsm
Mesh : 70 gsm

COLORS	PANTONE SERIGRAPHIE
Black / Grey	Black / 430C
Navy / Grey	2965C / 430C
Red / White	186C / White

DESCRIPTION

Français :	Coupe-vent sport bicolore enfant
English :	Sports bi-colour kids windbreaker
Nederlands :	Tweekleurige kids sport windbreaker
Deutsch :	Zweifarbige sportwindjacke für kinder
Español :	Cortaviento bicolor de deporte para niños
Italiano :	Giacca a vento sport bambino bicolore
Português :	Windbreaker de criança bicolor

MEASUREMENT

Description	6/8	8/10	10/12	12/14			
H05 Hauteur totale / Total height	55,60	60,70	65,80	70,85			
W05 1/2 largeur poitrine / 1/2 chest width	43,75	46,75	49,75	52,75			
H15 Longueur manche / Sleeve length	58,95	63,45	67,95	72,45			

PACKING

Box	25 pcs / box 6/8-8/10 => L:49cm W:32cm H:14cm GW:5.50kg NW:4.50kg 10/12-12/14 => L:54cm W:37cm H:14cm GW:5.50kg NW:4.50kg

CARE LABEL

REFERENCE : PA300

NAME : TST

SIZES : S_M_L_XL_XXL_3XL

COMPOSITION :

Main fabric : Polyester jersey 200 For body 100%polyester
Main fabric : Polyester jersey 200 For contrasted yokes 100%polyester
Fabric 2 : Rib 2x2 Polyester - 270 2 Layers
For front and back yokes 100%polyester

WEIGHT :

Main fabric : 200 gsm
Main fabric : 200 gsm
Fabric 2 : 270 gsm

FABRIC CONSTRUCTION AND FINISHING :

Brushed

COLORS	PANTONE SERIGRAPHIE
Black / Grey / Silver	Black / 430C / 430C
Black / Red / Silver	Black / 186C / 430C
Navy / Royal blue / Silver	281C / 300C / 430C

DESCRIPTION

Français :	Sweat d'entraînement bicolore
English :	Bi-colour sweat
Nederlands :	Tweekleurige trainings sweat
Deutsch :	Zweifarbiges Training Sweat
Español :	Sudadera de entrenamiento bicolor
Italiano :	Felpa da allenamento bicolore
Português :	Sweat bicolor de desporto

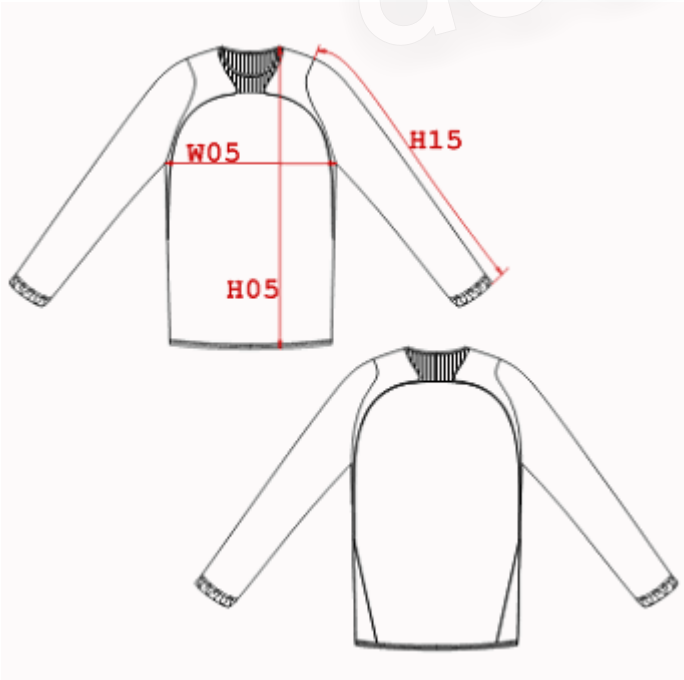

MEASUREMENT

Description	S	M	L	XL	XXL	3XL	
H05 Hauteur totale / Total height	70,90	72,90	74,90	76,90	79,65	82,40	
W05 1/2 largeur poitrine / 1/2 chest width	50,60	53,60	56,60	59,60	63,60	67,60	
H15 Longueur manche / Sleeve length	67,15	69,10	71,10	73,10	75,30	77,55	

PACKING

Box	20 pcs / box S-L => L:61cm W:40cm H:25cm GW:3kg NW:4kg XL-3XL=> L:70cm W:48cm H:25cm GW:4kg NW:3kg

CARE LABEL

deetex.de

REFERENCE : PA301

NAME : UVA

SIZES : XS_S_M_L_XL_XXL_3XL

COMPOSITION :

Main fabric : Polytricot 220 100%polyester
Main fabric : Polytricot 220 For contrasted side and front yokes 100%polyester

WEIGHT :

Main fabric : 220 gsm
Main fabric : 220 gsm

COLORS	PANTONE SERIGRAPHIE
Red / Black	186C / Black
Black / Yellow	Black / 109C
Navy / White	289C / White
Navy / Red	289C / 186C
Black / Grey	Black / 430C
Black / Orange	Black / 021C
Green / Black	362C / Black

DESCRIPTION

Français :	Veste de survêtement
English :	Tracksuit jacket
Nederlands :	Trainingsjas
Deutsch :	Training Jacke
Español :	Chaqueta de chántal
Italiano :	Giacca da sport
Português :	Blusão de treino

MEASUREMENT

Description	XS	S	M	L	XL	XXL	3XL
H05 Hauteur totale / Total height	68,65	70,75	72,85	74,95	77,05	79,95	82,85
W05 1/2 largeur poitrine / 1/2 chest width	52,05	55,05	58,05	61,05	64,05	68,05	72,05
H15 Longueur manche / Sleeve length	76,30	79	81,75	84,50	87,20	90,45	93,65

PACKING

Box	20 pcs / box XS-S=> L:48cm W:35cm H:22cm GW:11kg NW:9kg M-L=> L:54cm W:37cm H:22cm GW:12kg NW:10kg XL-XXL=> L:60cm W:39cm H:22cm GW:13kg NW:11kg 3XL=>L:66cm W:41cm H:22cm GW:14kg NW:12kg

CARE LABEL

REFERENCE : PA302

NAME : UVJ

SIZES : 6/8_8/10_10/12_12/14

COMPOSITION :

Main fabric : Polytricot 220 100%polyester
Main fabric : Polytricot 220 For contrasted side and front yokes 100%polyester

WEIGHT :

Main fabric : 220 gsm
Main fabric : 220 gsm

COLORS	PANTONE SERIGRAPHIE
Red / Black	186C / Black
Black / Yellow	Black / 109C
Navy / White	289C / White
Navy / Red	289C / 186C
Green / Black	362C / Black
Black / Grey	Black / 430C
Black / Orange	Black / 021C

DESCRIPTION

Français :	Veste de survêtement enfant
English :	Kids training jacket
Nederlands :	Trainingsjas kids
Deutsch :	Training Jacke für Kinder
Español :	Chaqueta de chántal para niños
Italiano :	Tuta sportiva bambino
Português :	Blusão de treino de criança

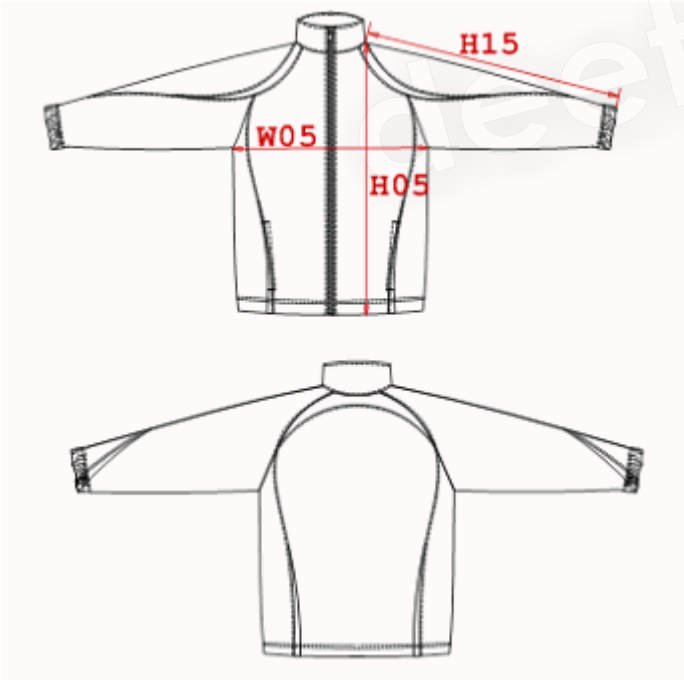

MEASUREMENT

Description	6/8	8/10	10/12	12/14			
H05 Hauteur totale / Total height	50,55	55	59,40	63,85			
W05 1/2 largeur poitrine / 1/2 chest width	40,05	43,05	46,05	49,05			
H15 Longueur manche / Sleeve length	59,10	63,60	68,10	72,55			

PACKING

Box	20pcs / box 6/8 => L:42cm W:30cm H:22cm GW:8.5kg NW:6.5kg 8/10 => L:42cm W:30cm H:22cm GW:9kg NW:7kg 10/12 => L:48cm W:35cm H:22cm GW:9.5kg NW:7.5kg 12/14 => L:48cm W:35cm H:22cm GW:10kg NW:8kg

CARE LABEL

REFERENCE : PA303

NAME : DSSC

SIZES : S_M_L_XL_XXL_3XL

COMPOSITION :

Main fabric : Interlock bonded polar fleece 370
100%polyester

COLORS	PANTONE SERIGRAPHIE
Black / Silver	Black / 430C
Dark grey / Silver	432C / 430C

WEIGHT :

Main fabric : 370 gsm

DESCRIPTION	
Français :	Veste softshell capuche
English :	Hooded softshell jacket
Nederlands :	Softshell jas met kap
Deutsch :	Softshell Jacke mit Kapuze
Español :	Chaqueta softshell con capucha
Italiano :	Giacca softshell con cappuccio
Português :	Casaco softshell com capuz

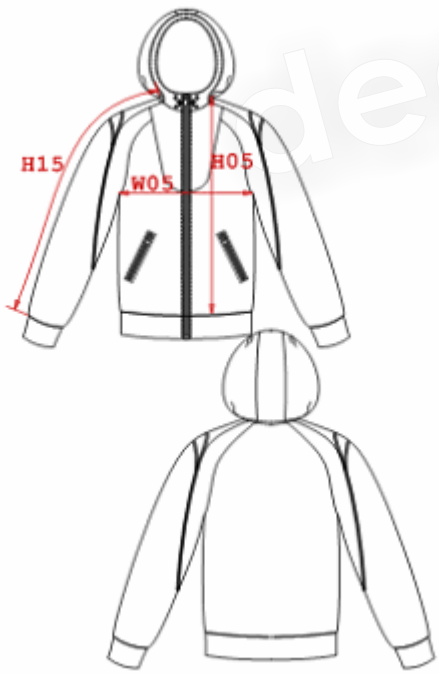

MEASUREMENT

Description	S	M	L	XL	XXL	3XL	
H05 Hauteur totale sans ceinture / Total height without waistband	60,75	62,80	64,85	66,95	69,80	72,65	
W05 1/2 largeur poitrine / 1/2 chest width	56	59	62	65	69	73	
H15 Longueur manche / Sleeve length	71,75	74,65	77,55	80,45	83,85	87,30	

PACKING

Box	10 pcs / box S-L => L:60cm W:41cm H:30cm GW:9.00kg NW:8.00kg XL-3XL => L:70cm W:41cm H:30cm GW:9.00kg NW:8.00kg

CARE LABEL

REFERENCE : PA400

NAME : ASMUA

SIZES : XS_S_M_L_XL_XXL_3XL

COMPOSITION :

Main fabric : Polyester jersey 140 For body and collar
100%polyester
Mesh : Mesh 125 For yokes 100%polyester

WEIGHT :

Main fabric : 140 gsm
Mesh : 125 gsm

COLORS	PANTONE SERIGRAPHIE
Yellow	109C
Royal blue	2935C
Red	186C
Green	362C
White	White
Navy	2965C
Black	Black
Sky blue	277C

DESCRIPTION

Français :	T-shirt de sport
English :	Sports T-shirt
Nederlands :	Sport T-shirt
Deutsch :	Polyester Sport T-shirt
Español :	Camiseta de deporte
Italiano :	T-shirt da sport
Português :	T-shirt de desporto

MEASUREMENT

Description	XS	S	M	L	XL	XXL	3XL
H05 Hauteur totale devant / Front total height	69,40	71,50	73,60	75,70	77,80	80,70	83,60
W05 1/2 largeur poitrine / 1/2 chest width	47	50	53	56	59	63	67
H15 Longueur dessus de manche +épaule / Outtter sleeve length + shoulder	36,65	37,55	39,45	41,35	43,25	45,70	48,15

PACKING

Box	25 pcs / box XS-3XL => L:43cm W:40cm H:20cm GW:4.00kg NW:3.00kg

CARE LABEL

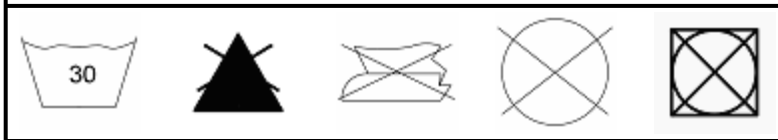

REFERENCE : PA401

NAME : ASMUJ

SIZES : 6/8_8/10_10/12_12/14

COMPOSITION :

Main fabric : Polyester jersey 140 For body and collar
100%polyester
Mesh : Mesh 125 For yokes 100%polyester

WEIGHT :

Main fabric : 140 gsm
Mesh : 125 gsm

COLORS	PANTONE SERIGRAPHIE
Yellow	109C
Royal blue	2935C
Red	186C
Green	362C
White	White
Navy	2965C
Black	Black
Sky blue	277C

DESCRIPTION

Français :	T-shirt de sport enfant
English :	Kids sports T-shirt
Nederlands :	Sport T-shirt kids
Deutsch :	Sport T-shirt für Kinder
Español :	Camiseta de deporte para niños
Italiano :	T-shirt da sport bambino
Português :	T-shirt de desporto de criança

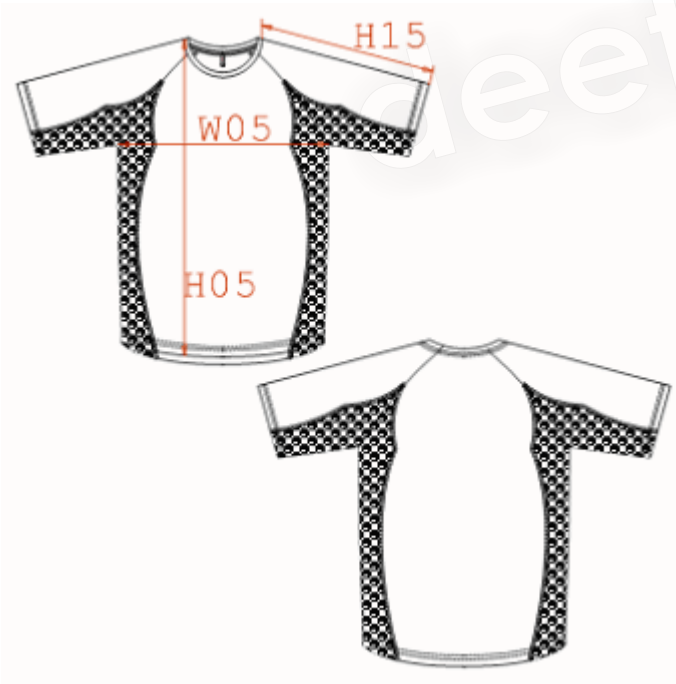

MEASUREMENT

Description	6/8	8/10	10/12	12/14			
H05 Hauteur totale devant / Front total height	52,15	57,30	62,40	67,55			
W05 1/2 largeur poitrine / 1/2 chest width	37	40	43	46			
H15 Longueur dessus de manche +épaule / Outtter sleeve length + shoulder	26,05	27,90	29,75	31,60			

PACKING

Box	25 pcs / box 6/8-12/14 => L:40cm W:40cm H:20cm GW:4kg NW:3kg

CARE LABEL

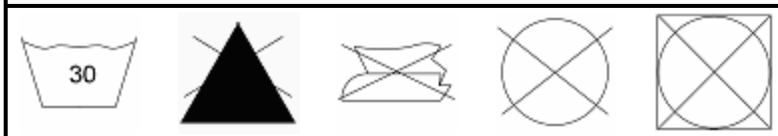

REFERENCE : PA403

NAME : ASMBIA

SIZES : XS_S_M_L_XL_XXL_3XL

COMPOSITION :

Main fabric : Polyester jersey 140 For body and collar
100%polyester
Mesh : Mesh 125 For contrasted yokes 100%polyester

WEIGHT :

Main fabric : 140 gsm
Mesh : 125 gsm

COLORS	PANTONE SERIGRAPHIE
Navy / Red	2965C / 186C
Royal blue / White	2935C / White
Yellow / Black	109C / Black
Red / Black	186C / Black

DESCRIPTION

Français :	T-shirt sport bicolore adulte
English :	Sports bi-colour T-shirt
Nederlands :	Tweekleurig sport T-shirt
Deutsch :	Zweifarbiges sport T-shirt
Español :	Camiseta bicolor de deporte
Italiano :	T-shirt sport bicolore
Português :	T-shirt bicolor de desporto

MEASUREMENT

Description	XS	S	M	L	XL	XXL	3XL
H05 Hauteur totale devant / Front total height	69,40	71,50	73,60	75,70	77,80	80,70	83,60
W05 1/2 largeur poitrine / 1/2 chest width	47	50	53	56	59	63	67
H15 Longueur dessus de manche +épaule / Outtter sleeve length + shoulder	36,65	37,55	39,45	41,35	43,25	45,70	48,15

PACKING

Box	25 pcs / box XS-3XL => L:42cm W:35cm H:19cm GW:6.00kg NW:5.00kg

CARE LABEL

deeter.de

REFERENCE : PA404

NAME : ASMBIJ

SIZES : 6/8_8/10_10/12_12/14

COMPOSITION :

Main fabric : Polyester jersey 140 For body and collar
100%polyester
Mesh : Mesh 125 For yokes 100%polyester

WEIGHT :

Main fabric : 140 gsm
Mesh : 125 gsm

COLORS	PANTONE SERIGRAPHIE
Navy / Red	2965C / 186C
Royal blue / White	2935C / White
Yellow / Black	109C / Black
Red / Black	186C/Black

DESCRIPTION	
Français :	T-shirt sport enfant bicolore
English :	Bi-colour kids' sports T-shirt
Nederlands :	Tweekleurig kids sport T-shirt
Deutsch :	Zweifarbigs sport T-shirt für kinder
Español :	Camiseta bicolor de deporte para niños
Italiano :	T-shirt bambino sport bicolore
Português :	T-shirt de desporto bicolor para criança

MEASUREMENT

Description	6/8	8/10	10/12	12/14			
H05 Hauteur totale devant / Front total height	52,15	57,30	62,40	67,55			
W05 1/2 largeur poitrine / 1/2 chest width	37	40	43	46			
H15 Longueur dessus de manche +épaule / Outtter sleeve length + shoulder	26,05	27,90	29,75	31,60			

PACKING

Box	25 pcs / box 6/8-12/14 => L:36cm W:29cm H:19cm GW:5.00kg NW:4.00kg

CARE LABEL

deeter.de

REFERENCE : PA500

NAME : USS

SIZES : U

COMPOSITION :

Main fabric : Polyester oxford 600D oily backing 240
100%polyester
Fabric 1 : Polytricot lining 150 For shoulder pad lining
100%polyester
Fabric 2 : Lining polyester 60 For cardboard 100%polyester

WEIGHT :

Main fabric : 240 gsm
Fabric 1 : 150 gsm
Fabric 2 : 60 gsm

COLORS	PANTONE SERIGRAPHIE
Black / Silver	Black / 430C
Black / Green	Black / 362C
Black / Red	Black / 186C
Black / Royal blue	Black / 2935C
Black / Yellow	Black / 109C

DESCRIPTION

Français :	Sac de sport
English :	Sports bag
Nederlands :	Sporttas
Deutsch :	Sport Tasche
Español :	Bolso de deporte
Italiano :	Sacca da sport
Português :	Saco de desporto

MEASUREMENT

Description	U						
W02 Longueur du sac / Bag length	60						
H01 Hauteur et largeur du sac / Bag height and width	30						

PACKING

Box	20 pcs / box U => L:46.5cm W:32.5cm H:52cm GW:16.50kg NW:15.50kg

CARE LABEL

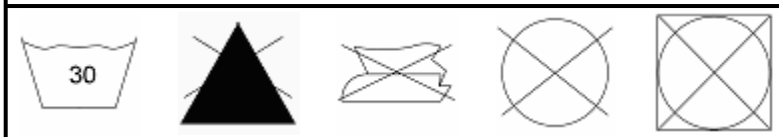

deelex.de

KARIBAN SPASO

REFERENCE : SP101

NAME :

SIZES : 36_38_40_42_44

COMPOSITION :

Main fabric : Cotton 145 100%cotton

COLORS	PANTONE SERIGRAPHIE
White	White
Khaki	Black 2C
Black	Black

WEIGHT :

Main fabric : 145 gsm

FABRIC CONSTRUCTION AND FINISHING :

Washed garment

DESCRIPTION	
Français :	Pantacourt femme
English :	Ladies short trousers
Nederlands :	Dameskuitbroek
Deutsch :	Caprihose für Damen
Español :	Pantalones cortos
Italiano :	Pantaloni 3/4 donna
Português :	Corsário 3/4 de senhora

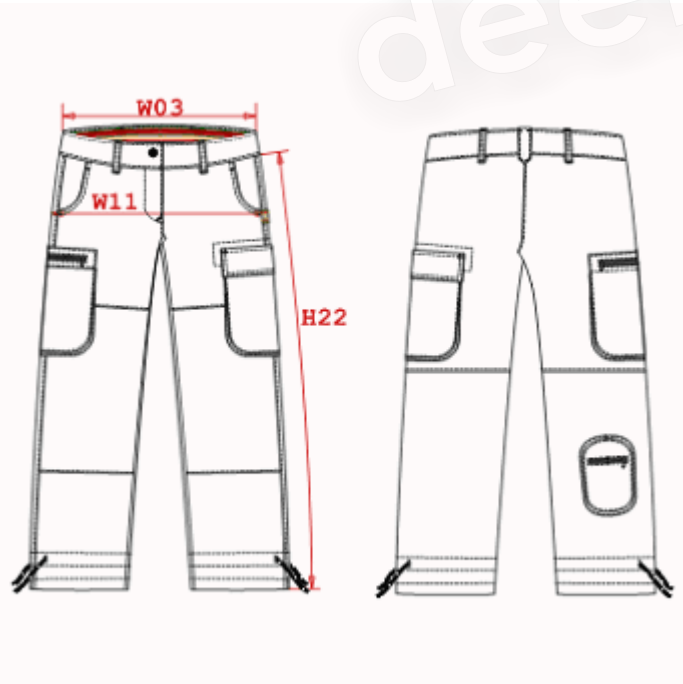

MEASUREMENT							
Description	**36**	**38**	**40**	**42**	**44**		
W03 1/2 largeur taille / 1/2 waist width	**39,30**	**41,30**	**43,30**	**45,30**	**47,30**		
W11 1/2 bassin à 16 cm / 1/2 hip width at 16cm from waist	**50,40**	**52,35**	**54,50**	**56,50**	**58,50**		
H22 Longueur côté / Side length	**75**	**75,50**	**77**	**77,50**	**78**		

PACKING	
Box	20 pcs / box All sizes => L:47cm W:36cm H:22cm GW:9.00kg NW:6.00kg

CARE LABEL

deetex.de

KARIBAN SPASO

REFERENCE : SP102

NAME :

SIZES : 38_40_42_44_46_48

COMPOSITION :

Main fabric : Cotton / Nylon 190 70%cotton / 30%nylon

COLORS	PANTONE SERIGRAPHIE
White	White
Light khaki	416C
Dark navy	296C

WEIGHT :

Main fabric : 190 gsm

DESCRIPTION

Français :	Pantacourt homme
English :	Mens 3/4 pants
Nederlands :	Heren kuitbroek
Deutsch :	Caprihose für herren
Español :	Pantalón corto para hombre
Italiano :	Pantaloni 3/4 uomo
Português :	Corsário

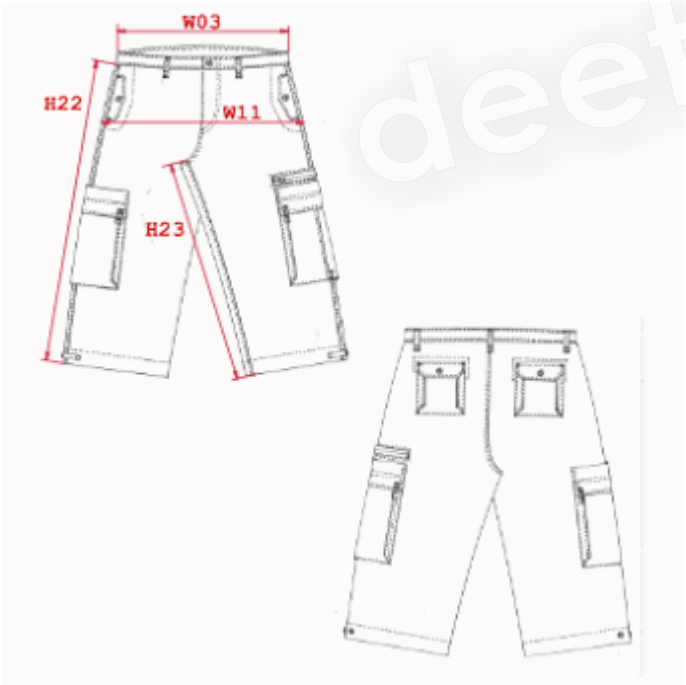

MEASUREMENT

Description	38	40	42	44	46	48	
W03 1/2 largeur taille / 1/2 waist width	39	41	43	45	47	49	
W11 1/2 bassin / 1/2 hip width	54	54	56	58	60	62	
H22 Longueur côté / Side length	66	66,50	67	68,50	69	70,50	
H23 Longueur entrejambe / Inside leg length	43	43	43	44	44	45	

PACKING

Box	20 pcs / box 38-42 => L:55cm W:36cm H:27cm GW:14.40kg NW:11.40kg 44-48 => L:59cm W:39cm H:27cm GW:14.40kg NW:11.40kg

CARE LABEL

deetex.de

KARIBAN SPASO

REFERENCE : SP105

NAME :

SIZES : 38_40_42_44_46_48_50_52_54

COMPOSITION :

Main fabric : Peached cotton heavy canvas 270
100%cotton

COLORS	PANTONE SERIGRAPHIE
Khaki	419C
Navy	296C
Beige	7530C
Black	Black
Dark grey	432C

WEIGHT :

Main fabric : 270 gsm

FABRIC CONSTRUCTION AND FINISHING :

Garment washed

DESCRIPTION

Français :	Pantalon homme
English :	Trousers
Nederlands :	Herenpantalon
Deutsch :	Cargo herrenhose
Español :	Pantalon para hombre
Italiano :	Pantaloni uomo
Português :	Calças

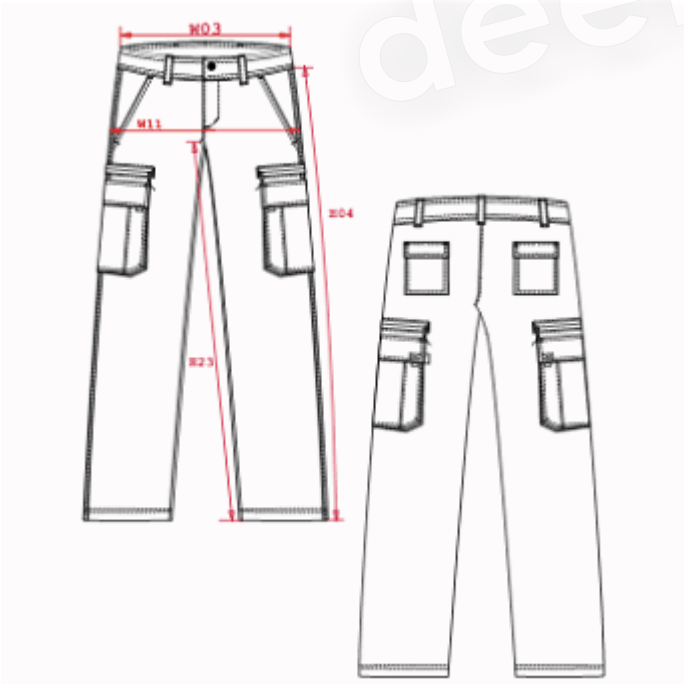

MEASUREMENT

Description	38	40	42	44	46	48	50	52	54	
W03 1/2 largeur taille / 1/2 waist width	39	41	43	45	47	49	51	53	55	
W11 1/2 bassin / 1/2 hip width	51	53	55	57	59	61	63	65	67	
H04 Hauteur coté / Side length	103,25	103,75	104,25	105,75	107,25	108,75	110,25	110,75	11,25	
H23 Longueur entrejambe / Inside leg length	84	84	84	85	86	87	88	88	88	

PACKING

Box	20 pcs / box 38 => L:60cm W:38cm H:15cm GW:6.00kg NW:5.00kg 40 => L:60cm W:38cm H:15cm GW:6.30kg NW:5.30kg 42 => L:60cm W:38cm H:15cm GW:6.50kg NW:5.50kg 44 => L:60cm W:38cm H:15cm GW:6.80kg NW:5.80kg 46 => L:60cm W:38cm H:15cm GW:7.00kg NW:6.00kg 48 => L:60cm W:38cm H:15cm GW:7.20kg NW:6.20kg

CARE LABEL

deetex.de

KARIBAN SPASO

REFERENCE : SP106

NAME :

SIZES : 36_38_40_42_44

COMPOSITION :

Main fabric : Canvas 200 100%cotton

COLORS	PANTONE SERIGRAPHIE
White	White
Black	Black
Chocolate	476C
Khaki	5605C

WEIGHT :

Main fabric : 200 gsm

FABRIC CONSTRUCTION AND FINISHING :

Garment washed

DESCRIPTION

Français :	Pantalon femme
English :	Ladies canvas trousers
Nederlands :	Dames broek
Deutsch :	Damenhose
Español :	Pantalón para mujer
Italiano :	Pantaloni donna
Português :	Calças de senhora

deetex.de

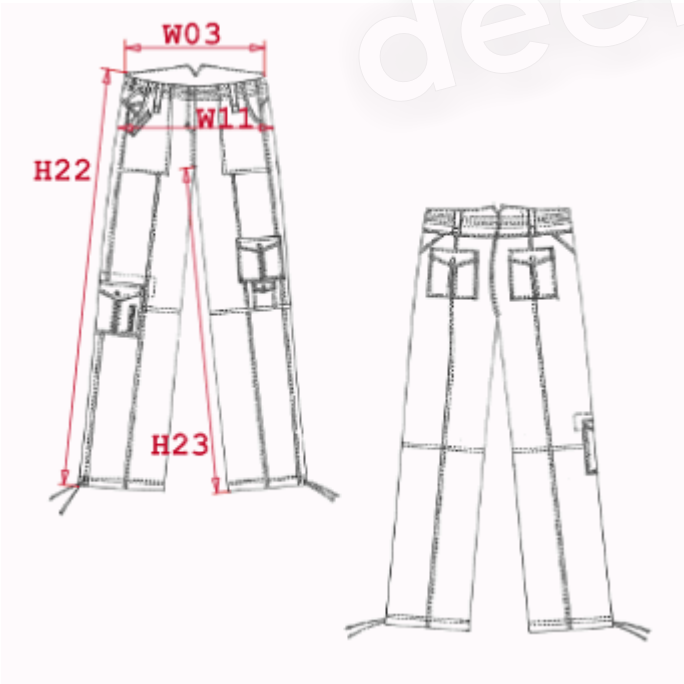

MEASUREMENT

Description	36	38	40	42	44		
W03 1/2 largeur taille / 1/2 waist width	38,25	40,25	42,25	44,25	46,25		
W11 1/2 bassin / 1/2 hip width	46,25	48,25	50,25	52,25	54,25		
H22 Longueur côté / Side length	104,50	105	105,50	107	107,50		
H23 Longueur entrejambe / Inside leg length	84,50	84,50	84,50	85,50	85,50		

PACKING

Box	10 pcs / box 36-44 => L:55cm W:36cm H:15cm GW:6.00kg NW:5.40kg

CARE LABEL

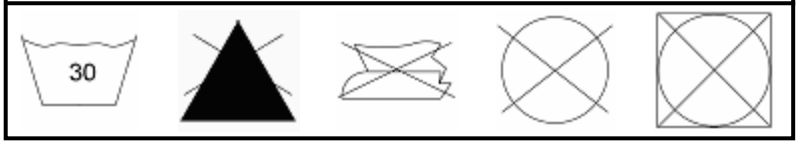

KARIBAN SPASO

REFERENCE : SP109

NAME :

SIZES : 38_40_42_44_46

COLORS	PANTONE SERIGRAPHIE
Jean	

COMPOSITION :
Main fabric : Denim 400 100%cotton

WEIGHT :
Main fabric : 400 gsm

FABRIC CONSTRUCTION AND FINISHING :
Stone washed

DESCRIPTION

Français :	Jean destructuré délavé homme
English :	Men's vintage denim jeans
Nederlands :	"Afgewassen" jeans
Deutsch :	Ausgewaschene herren-jeans
Español :	Pantalón vaquero efecto desteñido
Italiano :	Jeans vintage uomo
Português :	Calça jeans pré lavada

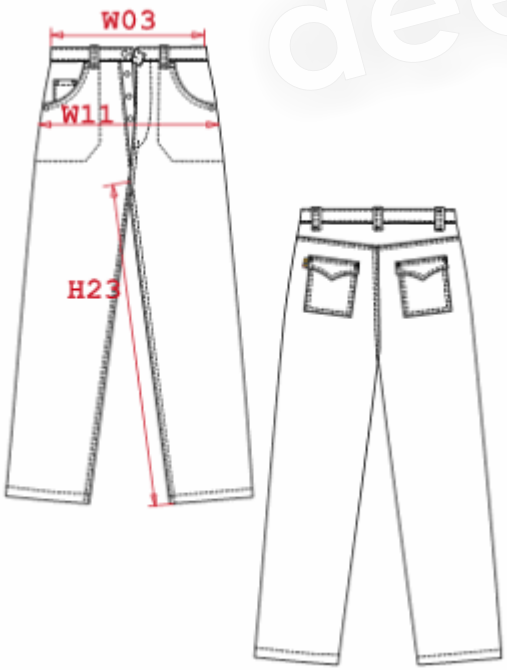

MEASUREMENT

Description	38	40	42	44	46		
W03 1/2 largeur ceinture / 1/2 waist width	41	43	45	47	49		
W11 1/2 bassin / 1/2 hip width	49,75	51,75	55,75	57,75	59,75		
H23 Longueur entrejambe / Inside leg length	86,50	86,50	86,50	86,50	86,50		

PACKING

Box	20 pcs / box 38 => L:60cm W:40cm H:30cm GW:15kg NW:13,8kg 40 => L:60cm W:40cm H:30cm GW:15,7kg NW:14,5kg 42 => L:60cm W:40cm H:30cm GW:16,1kg NW:14,9kg 44 => L:60cm W:40cm H:30cm GW:16,5kg NW:15,3kg 46 => L:60cm W:40cm H:30cm GW:16,9kg NW:15,7kg

CARE LABEL

deetex.de

KARIBAN SPASO

REFERENCE : SP110

NAME :

SIZES : 36_38_40_42_44

COMPOSITION :
Main fabric : Poplin 130 100%cotton

COLORS	PANTONE SERIGRAPHIE
Light beige	Warm gray 2C
Mocha	411C

WEIGHT :
Main fabric : 130 gsm

FABRIC CONSTRUCTION AND FINISHING :
130x100 40x40 poplin Garment washed

DESCRIPTION

Français :	Pantalon femme
English :	Ladies pants
Nederlands :	Dames broek
Deutsch :	Damenhose
Español :	Pantalón para mujer
Italiano :	Pantaloni donna
Português :	Calça de senhora

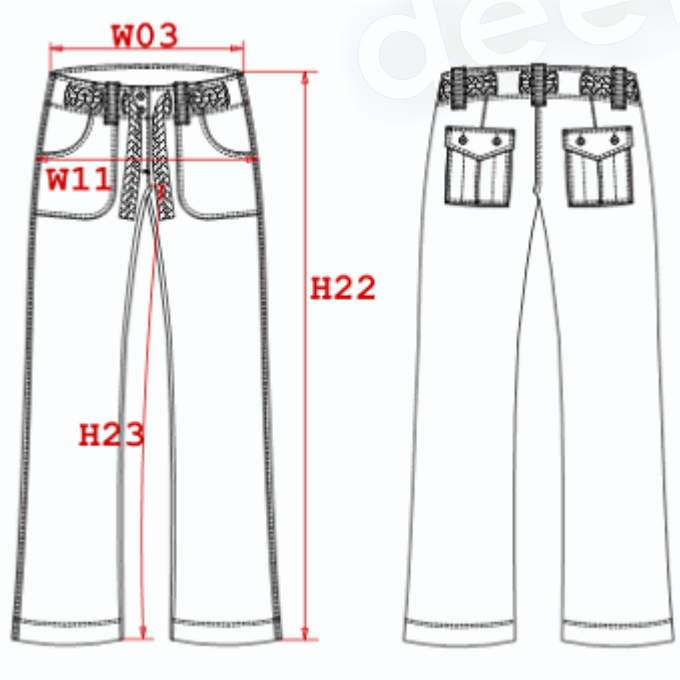

MEASUREMENT

Description	36	38	40	42	44		
W03 1/2 largeur taille / 1/2 waist width	39	41	43	45	47		
W11 1/2 bassin / 1/2 hip width	48	50	52	54	56		
H22 Longueur côté / Side length	102,50	103	103,50	105	105,50		
H23 Longueur entrejambe / Inside leg length	81,15	81,15	81,15	82,20	82,20		

PACKING

Box	10 pcs / box 36-44 => L:55cm W:34cm H:10cm GW:5.00kg NW:3.00kg

CARE LABEL

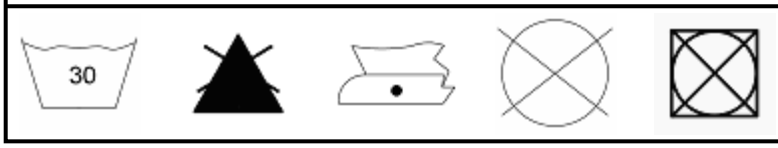

deetex.de

KARIBAN SPASO

REFERENCE : SP111

NAME :

SIZES : 38_40_42_44_46_48

COMPOSITION :

Main fabric : Cotton twill 250 100%cotton

COLORS	PANTONE SERIGRAPHIE
Khaki	Black 2C
Navy	296C
Light beige	7501C

WEIGHT :

Main fabric : 250 gsm

FABRIC CONSTRUCTION AND FINISHING :

Garment washed

DESCRIPTION

Français :	Bermuda homme
English :	Bermuda shorts
Nederlands :	Heren bermuda
Deutsch :	Herren Bermuda
Español :	Bermuda
Italiano :	Bermuda uomo
Português :	Bermuda de homen

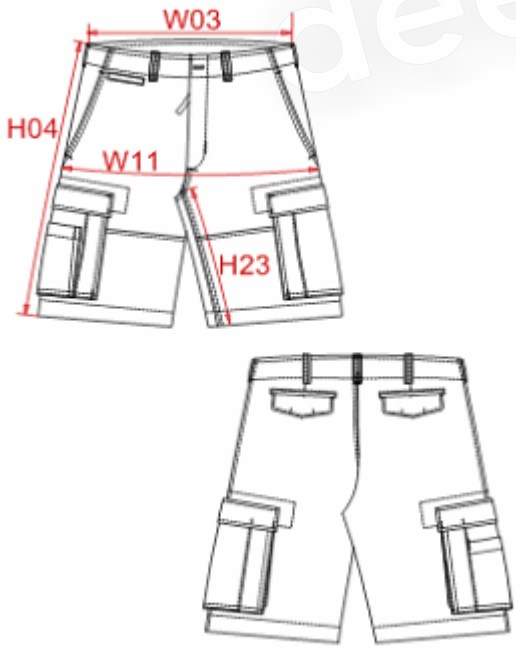

MEASUREMENT

Description	38	40	42	44	46	48	
W03 1/2 largeur taille / 1/2 waist width	40	42	44	46	48	50	
W11 1/2 bassin / 1/2 hip width	51,85	53,85	55,85	57,85	59,85	61,85	
H04 Hauteur coté / Side length	56,15	57,20	58,20	59,20	60,25	61,25	
H23 Longueur entrejambe / Inside leg length	32,95	33,45	34	34,50	35	35,55	

PACKING

Box	10 pcs / box 38 => L:60cm W:38cm H:15cm GW:6.00kg NW:5.00kg 40 => L:60cm W:38cm H:15cm GW:6.30kg NW:5.30kg 42 => L:60cm W:38cm H:15cm GW:6.50kg NW:5.50kg 44 => L:60cm W:38cm H:15cm GW:6.80kg NW:5.80kg 46 => L:60cm W:38cm H:15cm GW:7.00kg NW:6.00kg 48 => L:60cm W:38cm H:15cm GW:7.20kg NW:6.20kg

CARE LABEL

deetex.de

KARIBAN SPASO

REFERENCE : SP202

NAME :

SIZES : S_M_L_XL_XXL_3XL

COMPOSITION :

Main fabric : Combed cotton jersey 180 100%cotton

COLORS	PANTONE SERIGRAPHIE
Navy	296C
White	White
Black	Black
Capuccino	438C
Corde	7529C

WEIGHT :

Main fabric : 180 gsm

FABRIC CONSTRUCTION AND FINISHING :

Washed

DESCRIPTION

Français :	T-shirt manches longues
English :	Long sleeve T-shirt
Nederlands :	Heren T-shirt met lange mouwen
Deutsch :	Langarm herren T-shirt
Español :	Camiseta de manga larga para hombre
Italiano :	T-shirt uomo maniche lunghe
Português :	T-shirt de manga comprida

MEASUREMENT

Description	S	M	L	XL	2XL	3XL	
H05 Hauteur totale / Total height	68,50	70,50	72,50	74,50	77,25	80	
W05 1/2 largeur poitrine / 1/2 chest width	49	52	55	58	62	66	
H15 Longueur manche / Sleeve length	64	66	68	70	72,20	74,40	

PACKING

Box	25 pcs / box S => L:58cm W:39cm H:16cm GW:7.00kg NW:6.00kg M => L:58cm W:39cm H:16cm GW:7.40kg NW:6.40kg L => L:58cm W:39cm H:16cm GW:7.80kg NW:6.80kg XL => L:58cm W:39cm H:17cm GW:8.20kg NW:7.20kg XXL => L:58cm W:39cm H:17cm GW:8.60kg NW:7.60kg 3XL => L:58cm W:39cm H:17cm GW:9.90kg NW:8.00kg

CARE LABEL

deetex.de

KARIBAN SPASO

REFERENCE : SP400

NAME :

SIZES : 40/41_42/43_44/45

COLORS	PANTONE SERIGRAPHIE
Khaki	449C

COMPOSITION :

Main fabric : Canvas For crossed straps 100%cotton

WEIGHT :

Main fabric :

DESCRIPTION	
Français :	Claquettes
English :	Sandals
Nederlands :	Tongs
Deutsch :	Steppschuhe
Español :	Sandalias
Italiano :	Ciabattina
Português :	Chinelos

MEASUREMENT							
Description	**40/41**	**42/43**	**44/45**				
U.K sizes	**6 1/2**	**8**	**9 1/2**				
	7 1/2	**9**	**10 1/2**				

PACKING	
Box	25 pcs / box 40/41 => L:45cm W:31cm H:28cm GW:8.00kg NW:7.00kg 42/43 => L:46cm W:31cm H:29.5cm GW:9.00kg NW:8.00kg 44/45 => L:47cm W:31cm H:31cm GW:10.00kg NW:9.00kg

CARE LABEL

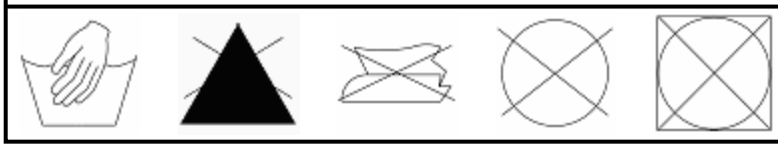

deefex.de

KARIBAN SPASO

REFERENCE : SP401

NAME :

SIZES : 40/41_42/43_44/45

COLORS	PANTONE SERIGRAPHIE
Brown	476C

COMPOSITION :

Main fabric : Canvas 100%cotton

WEIGHT :

Main fabric :

DESCRIPTION	
Français :	Tongs
English :	Flip flops
Nederlands :	Tongs
Deutsch :	Strandschuh
Español :	Chanclas playeras
Italiano :	Infradito
Português :	Chinelos

MEASUREMENT							
Description	**40/41**	**42/43**	**44/45**				
U.K sizes	**6 1/2**	**8**	**9 1/2**				
	7 1/2	**9**	**10 1/2**				

PACKING	
Box	25 pcs / box 40/41 => L:47cm W:31cm H:28cm GW:8.00kg NW:7.00kg 42/43 => L:47cm W:31cm H:29.5cm GW:9.00kg NW:8.00kg 44/45 => L:47cm W:31cm H:31cm GW:10.00kg NW:9.00kg

CARE LABEL

deefex.de

KARIBAN SPASO

REFERENCE : SP402

NAME :

SIZES : U

COMPOSITION :

Main fabric : Canvas 100%cotton

COLORS	PANTONE SERIGRAPHIE
Khaki	449C
Corde	7529C

WEIGHT :

Main fabric :

DESCRIPTION	
Français :	Ceinture
English :	Belt
Nederlands :	Broeksriem
Deutsch :	Einzelgrösse
Español :	Cinturón
Italiano :	Cintura
Português :	Cinto

MEASUREMENT							
Description	**U**						
O14 Longueur ceinture / Belt length	**115**						

PACKING	
Box	100 pcs / box U => L:55cm W:26cm H:30cm GW:15.00kg NW:13.00kg

CARE LABEL

deetex.de